EMC FILTERS

DISAI
Automatic Systems

Single-Phase Filters, Three-Phase Filters,
Three-Phase + Neutral Line Filters, DC Filters,
Screened Room Filters (3Ph+N) , Output Ferrites,
dV/dt Output Filters , Feedthrough Filters

INTRODUCTION

Electromagnetic Interference

Most electronic equipment generates electromagnetic interference,which in some cases may be intentional (a radiofrequency generator) or unwanted (electronic motor speed controller). This interference is mainly propagated in two ways, one via an energy conducting network, and the other through the air. These are called CONDUCTED INTERFERENCE (150 KHz TO 30 MHz) and RADIATED INTERFERENCE (30 MHz to 300 MHz), respectively.
Also, electronic equipment can fail when working within an electromagnetic environment. This tendency to fail is very common and is known as ELECTROMAGNETIC SUSCEPTIBILITY. The relationship between perturbing and victim equipment is known as ELECTROMAGNETIC COMPATIBILITY.
These terms are abbreviated as follows:
EMC = Electromagnetic Compatibility
EMS = Electromagnetic Susceptibility
CE = Conducted Interference (Emission)
RE = Radiated Interference (Emission)
EMI = Electromagnetic Interference

Conducted Interference

The interference conducted through an energy conduction network has two propagation routes.
COMMON MODE. Also called ASYMMETRIC. This perturbation is present between the safety earth and the conduction lines.
DIFFERENTIAL MODE. Also called SYMMETRIC. This perturbation is present in the conduction lines.

Radiated Interference

This propagation through space is caused by the fact that the equipment, or some part of it, is acting as an efficient antenna over a given frequency range. It is captured, by induction, in the power supply cable, or even directly by some internal element of the device which acts as an efficient receiving antenna over the same frequency range as the interfering signal.

How to minimize the interference

In order to avoid a high degree of contamination of the power supply lines with electromagnetic interference (EMI), equipment which could cause its generation should incorporate a power line filter, in order to block, as far as possible, the passing of this interference. Also, as it is not possible to have a clean power supply line, the line filter also prevents the passing of this interference to the equipment.
a) The filter has to attenuate the interference passed to the power line.
b) The filter has to attenuate the interference from the power line.
Basically, the filters should be designed as low-pass filters, to achieve a significant attenuation in the frequency band which covers the interference, and a minimal attenuation at the power line frequency.
Of course, the design of a filter has to take into account also that its characteristic impedance should be as unmatched as possible to that of the interference in order that the perturbation is reflected back to its source.

INTRODUCTION

Filter characteristics

The filters should cover the range of frequencies between 10 KHz and 300 MHz, although the range can be different depending on the standard to be applied. They should generate high insertion losses within the specified frequency range.
The insertion losses should be defined for both SYMMETRIC and ASYMMETRIC modes.
As the filters are normally installed in the power supply line, they should comply with the appropiate standards.

Special Line Filters

In this catalogue it is possible to select power line filters of one or more stages, with printed circuit connection, spade fasterners, cables, IEC connector incorporated, screw or clip mounting, and a wide variety of accessories such as fuses, voltage selectors, switches etc...
If you do not find the type which best suits your requirements for current attenuation, size, mounting, etc. We can manufacture the model which suits your requirements on request.
has a laboratory equipped with the most modern and sophisticated instrumentation to be found on the market, and its manufacturing plant uses a flexible production system which allows it to offer made to measure solutions.

Selection and installation

The choice of the most suitable power line filter and its installation in the equipment are of primary importance if we wish to fully benefit from its features. As can be seen later on, we have models with and incorporated connector and direct access from the exterior, and others for internal mounting on the chassis or the printed circuit. In all cases the external shielding of the power line filter should be connected to the equipment chassis and the power and load lines should be as short as possible and sufficiently separated.

Verification Tests

In the final stage of the manufacturing process, the power line filters have to pass strict verification tests to check their reliability and safety for use. The methods followed are described below:

1) High voltage test

Apply voltage of:
1850 VAC 50 Hz 3s between L-N/PE
1750 VDC 3s between L/N
Medical series (M) 2500 VAC between L-N/PE

2) Leakage current test

The verification is carried out according to standards using specially designed equipment. The limits are indicated for each series. See diagram in fig. 4.

3) Attenuation test

Attenuation is defined as the relation, in dB between the power input to the load with and without the filter over the full range of working frequencies.
See diagrams for the measurement of attenuation in common and differential modes in fig. 5 and 6.

INTRODUCTION

General Technical Characteristics

- Rated voltage single phase: 250 VAC 50/60 Hz
- Rated voltage three phase: 520/760 VAC 50/60 Hz
- Rated current: The rated current, INOM is given for an ambient temperature the permissible operating current, IPERM, must be reduced according to the follwing formula:

- Dielectric strength test:
L-N / PE 1850 VAC 3s
L/N 1750 VDC 3s
- Leakage current: 250 V 50/60 Hz
0.552 x rated for 115 V 50/60 Hz
- Climatic category: HPF/HMF
- Component tolerance:
L: -30%, +50% C: -20%, +20%
R: -10%, +10%
- Types of connexion:
Z = Faston 6,30 x 0,8 mm
X = Cables UL-1015
V = Pins for P.C.B Ø = 1.3/0,8 mm
W = Screws M4 / M6 / M10
B = Terminal block
P= Bus Bar

Diagram Powerline

Figure 4

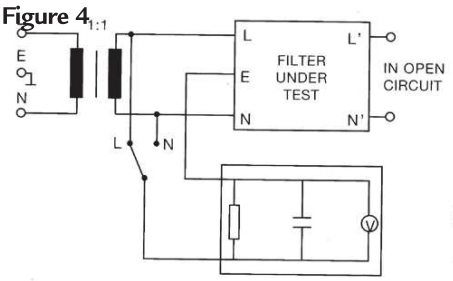

Figure 5

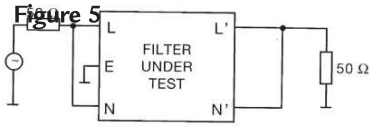

Figure 6

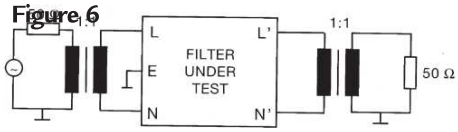

EMC Filter Chart by Application

APPLICATIONS	TRANSPORT		MILITAR			DRIVES AND CONTROLS						ELECTROMEDICAL	TELECOMUNI-CATIONS			RENEWABLE ENERGY		INDUSTRIAL AUTOMATION			LIFTS	CONSUMER ELECTRONICS		
C-Series		•	•	•	•							•	•	•				•	•	•	•	•	•	•
DTRF (20-50A)	•	•				•	•	•	•	•		•			•	•						•	•	•
FA (1-30A)															•	•		•	•	•	•	•	•	•	•
FA-V (1-6A)															•	•		•	•	•	•	•	•	•	•
FB (1-20A)																			•	•	•	•	•	•	•
FC (3-10A)												•			•	•			•	•	•	•	•	•	•
FC1 FC2 FC3 FC4			•	•	•																				
FD (1-6A)						•	•	•	•	•	•									•	•	•	•	•	•
FDC (1-6A)						•	•	•	•	•	•									•	•	•	•	•	•
FDV (1-10A)						•	•	•	•	•	•									•	•	•	•	•	•
FE (1-30A)															•	•		•	•	•	•	•	•	•	•
FEDC (25-1500A)	•	•																•							
FEH (1-30A)	•	•				•	•	•	•	•	•				•	•				•	•	•	•	•	•
FEHV (6-30A)						•	•	•	•	•	•									•	•	•	•	•	•
FF (3-20A)	•	•				•	•	•	•	•	•	•			•										
FFH (1-16A)						•	•	•	•	•	•														
FFHV (6-30A)	•	•				•	•	•	•	•	•				•			•	•	•	•	•	•	•	•
FG/FGR - T (3-6A)												•			•	•							•	•	•
FG/FGR - V (3-6A)												•			•	•							•	•	•
FG/FGR (3-6A)												•			•	•							•	•	•
FI (2-10A)												•			•	•							•	•	•
FI-F (2-10A)												•			•	•							•	•	•
FI-FM (2-10A)												•			•	•							•	•	•
FL (1-10A)												•			•	•									
FOVT (8-70A)						•	•	•	•	•	•									•	•	•	•	•	•
FR/FRR (1-10A)															•	•				•	•	•	•	•	•
FT (1-6A)												•			•	•							•	•	•
FTA (3-6A)												•			•	•							•	•	•
FTC (1-6A)												•			•	•							•	•	•
FTC-C (1-6A)												•			•	•							•	•	•
FTC-M (1-6A)												•			•	•							•	•	•
FTCV (1-6A)												•			•	•							•	•	•
FTCV-C (1-6A)												•			•	•							•	•	•
FTCV-M (1-6A)															•	•							•	•	•
FT-M (1-6A)															•	•							•	•	•
FTN (1-6A)												•											•	•	•
FTN-M (1-6A)												•											•	•	•
FTO (1-6A)												•											•	•	•
FTO-M (1-6A)												•											•	•	•
FVBD (7-250A)						•	•	•	•	•	•									•	•	•	•		
FVDT (7-900A)	•	•				•	•	•	•	•	•						•	•		•	•	•	•	•	•
FVDT-D (5-28A)	•	•				•	•	•	•	•	•									•	•	•	•	•	•
FVNSB (8-200)	•	•				•	•	•	•	•	•						•			•	•	•	•		•	•
FVRB (35-300A)						•	•	•	•	•	•													•	
FVSB (7-180A)	•	•		•		•	•	•	•	•	•							•	•	•	•	•	•	•	•
FVST (6-660A)	•	•				•	•	•	•	•	•				•	•		•	•	•	•	•	•	•	•
FVTC (10-1000A)						•	•	•	•	•	•									•	•	•			
FVTO-IV (6-180A)	•	•				•	•	•	•	•	•				•	•		•		•	•	•		•	•	•
HCWMF (150-2500A)																	•								
N-1 N-2 N-3	•	•				•	•	•	•	•	•	•	•	•	•	•	•	•	•	•	•	•	•	•	•
P-0999 (16-60A)						•	•	•	•	•	•												•		
P-Series		•	•	•	•							•	•	•											
PE (0,5-6A)												•		•	•				•	•	•	•		•	•	•
PF (50-150A)																		•	•	•	•	•			
PFT (3-150A)	•	•		•				•												•	•	•	•	•	•	•
STF (8-200A)	•	•		•				•												•	•	•	•	•	•	•

RAPID GUIDE

Single phase Filters

CHASSIS PANEL MOUNTING					PCB MOUNTING		SCREENED ROOM FILTERS
General Use	Medical Use	For SMPS	High Atten.	Very High Atten.	Metal Box	Plastic Box	
FA (1-30 A)	**FG** (3-6 A)	**FC** (3-10 A)	**FE** (1-30 A)	**FB** (1-20 A)	**FA-V** (1-6 A) **FG-V** (1-6 A)	PE (0,5-6 A)	**(14 KHz-10 GHz)** **FC1** (10-85 A)
PF (50-150 A)	**FGR** (3-6 A)	**FL** (1-10 A)	**FEH** (1-30 A)	**FF** (3-20 A)			**(150 KHz-10 GHz)** **FC2** (10-85 A)
FR/FRR (1-30 A)				**FFH** (1-16 A)	SMPS = Switched Mode Power Supply PCB = Printed Circuit Board		
			FEHV (6-30 A)	**FFHV** (6-30 A)			

Single phase Filters
Chassis Panel Mounting with IEC Connector

	General Use	Size reduced	With Fuses	Fuse + Switch	Fuse + Switch + Voltage Selector
General Use	**FD** (1-6 A)	**FTA** (3-6 A)	**FI/FI-F** (1-10 A)	**FT-FTN** (1-6 A)	
High Atten.				**FTC** (1-6 A)	**FTCV** (1-6 A)
Earth Choke	**FDC** (1-6 A)				**FTCV** (1-6 A)
Medical Use	**FGT** (3-6 A)		**FI-FM** (1-10 A)	**FT-M/FTN-M/FTC-M** (1-10 A)	**FTCV-M** (1-6 A)

3-Phase Filters

	3-Phase + Neutral	3-Phase without neutral for frecuency inverters				Frecuency Inverters Output	Screened Room Filters 3-Phases + Neutral
One Stage	**PFT** (3-150 A) **STF** (8-200 A)	**FVST** (3-110 A) **FVTC** (10-1000 A)	**FVSB** (7-180 A)	**DTRF** (20-50 A) **FVRB** (35-300 A)		**N-1 N-2 N-3** (16-125 A)	**FC3** (14 Khz - 10 Ghz) (16-125 A)
Double Stage	**FVTO-IV** (7-280 A) **FVNSB** (8-200 A)	**FVDB** (7-250 A)	**FVDT** (7-75 A)	**FVDT-D** (6-28 A)	**P-0999** 4 kw - 16 A 11 kw - 36 A 18,5 kw - 55 A	**FOVT** (8-70 A) (dV/dT)	**FC3** (150 Khz - 10 Ghz) (16-125 A)
Compact Size		**FVST** (180-660 A)	**FVDT** (100-900 A)		**HCWMGF** (150-2500 A)		

Dc Filters

Name	Voltage	Current
FEDC series	1200 Vdc	(25-1500 A)

Feedthorught Filters

Name	Voltage	Current	Topology
P Series	250Vac/400 Vdc	(10 - 63 A)	Single Line Pi Circuit
C Series	250Vac/400 Vdc	(10 - 250 A)	Single Line C Circuit

FA

Chassis Panel Mounting Single Phase Filter (1-30 A)

General Purpose

Chassis mounting single stage filter for general purpose.
Good attenuation over a wide frequency range.
Small size.
Low leakage current.

General Specifications

Maximum operating voltage: 250Vac.
Operating frequency: DC - 60Hz.
Hipot test voltage:
L/N->PE: 1800Vac 2s.
L->N: 1700 Vdc 2s.
Application class:
HPF Acc. TO DIN 40040
(-25°C/+85°C/95% RH, 30d).
Flammability class: UL 94 V2.

Electrical schematics

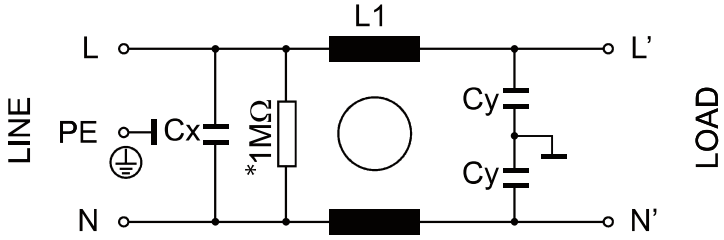

* Only for FAR versions

Product List

TYPE	I	L1	CX	C Y	HOUSING	LCURRENT	CONNECTION	WEIGHT ±g
FA-1V					205		1,3mm PIN	43
FA-1X	1 Amp	2 mH	10 nF	2,2 nF	204	0,21 mA	AWG18 wire	59
FA-1Z					203		FASTON 6,3mm	47
FA-3V					205		1,3mm PIN	46
FA-3X	3 Amp	1,3 mH	10 nF	2,2 nF	204	0,21 mA	AWG18 wire	61
FA-3Z					203		FASTON 6,3mm	47
FA-6V					205		1,3mm PIN	48
FA-6X	6 Amp	0,8 mH	10 nF	2,2 nF	204	0,21 mA	AWG18 wire	55
FA-6Z					203		FASTON 6,3mm	49
FA-10X	10 Amp	0,5 mH	100 nF	4,7 nF	213	0,45 mA	AWG18 wire	130
FA-10Z					212		FASTON 6,3mm	124
FA-20W	20 Amp	0,48 mH	100 nF	4,7 nF	223	0,45 mA	M6 SCREW	565
FA-20Z					216		FASTON 6,3mm	150
FA-30W	30 Amp	0,48 mH	33 nF	2,2 nF	223	0,21 mA	M6 SCREW	646

Insertion Loss

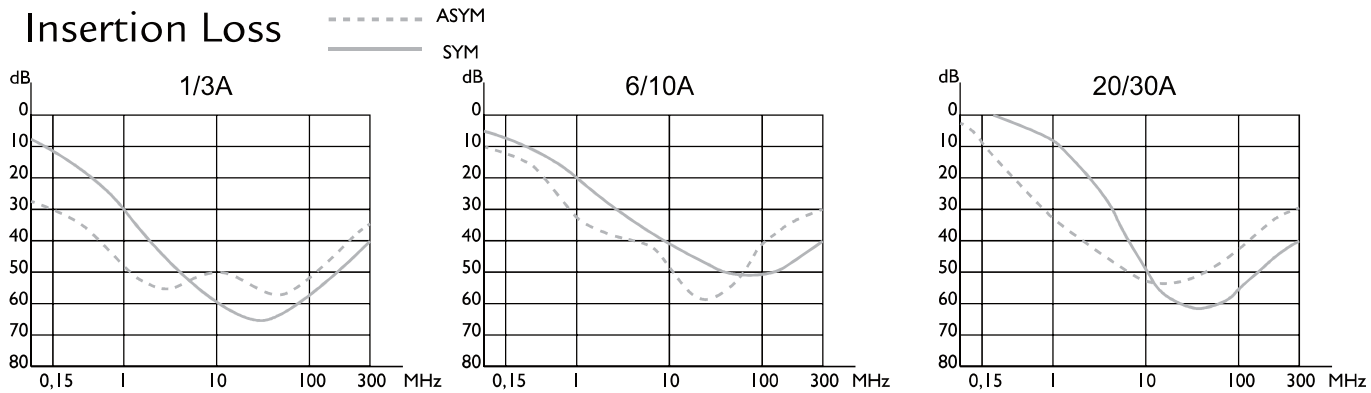

FB

High Attenuation Single Phase Filter (1-20 A)

General Purpose

Double stage filter.
High attenuation.
General purpose applications with high EMI levels.

EN60939-2

General Specifications

Maximum operating voltage: 250Vac.
Operating frequency: DC - 60Hz.
Hipot test voltage:
L/N->PE: 1800Vac 2s
L->N: 1700 Vdc 2s.
Application class:
HPF Acc. TO DIN 40040
(-25°C/+85°C/95% RH, 30d)
Flammability class: UL 94 V2.

Electrical schematics

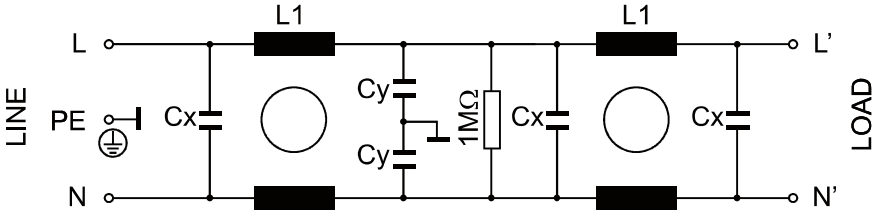

Product List

TYPE	I	L1	CX	C Y	HOUSING	LCURRENT	CONNECTION	WEIGHT ±g
FB-1X	1 Amp	3 mH	100 nF	4,7 nF	213	0,45 mA	AWG18 WIRE	132
FB-1Z					212		FASTON 6,3mm	126
FB-2X	2 Amp	2 mH	100 nF	4,7 nF	213	0,45 mA	AWG18 WIRE	115
FB-2Z					212		FASTON 6,3mm	109
FB-5X	5 Amp	1,5 mH	100 nF	4,7 nF	213	0,45 mA	AWG18 WIRE	133
FB-5Z					212		FASTON 6,3mm	125
FB-10X	10 Amp	1 mH	100 nF	4,7 nF	217	0,45 mA	AWG18 WIRE	246
FB-10Z					216		FASTON 6,3mm	240
FB-20W	20 Amp	0,8 mH	100 nF	4,7 nF	223	0,45 mA	M6 SGREW	682
FB-20Z					221		FASTON 6,3mm	500

Insertion Loss

ASYM
SYM

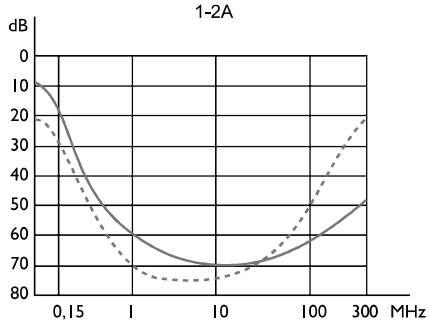

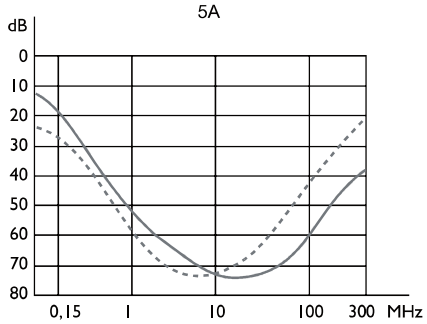

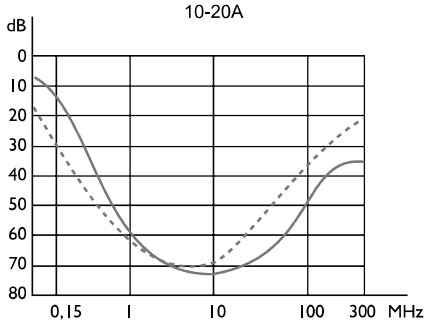

FC

SMPS Chassis Panel Mounting Single Phase Filter (3-10 A)

For equipment using s.m.p.s.

Chassis mounting double stage filter.
High symmetrical attenuation.
Switching mode power supplies.

EN60939-2

General Specifications

Maximum operating voltage: 250Vac.
Operating frequency: DC - 60Hz.
Hipot test voltage:
L/N->PE: 1800Vac 2s.
L->N: 1700 Vdc 2s.
Application class:
HPF Acc. TO DIN 40040
(-25°C/+85°C/95% RH, 30d).
Flammability class: UL 94 V2.

Electrical schematics

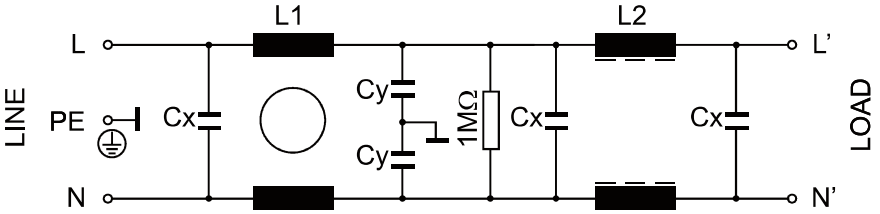

Product List

TYPE	I	L1	L2	CX	C Y	HOUSING	LCURRENT	CONNECTION	WEIGHT ±g
FC-3X	3 Amp	3 mH	0,3 mH	100 nF	4,7 nF	215	0,45 mA	AWG18 WIRE	170
FC-3Z						214		FASTON 6,3mm	164
FC-6X	6 Amp	1 mH	0,15 mH	100 nF	4,7 nF	217	0,45 mA	AWG18 WIRE	205
FC-6Z						216		FASTON 6,3mm	199
FC-10X	10 Amp	0,5 mH	0,05 mH	100 nF	4,7 nF	217	0,45 mA	AWG18 WIRE	249
FC-10Z						216		FASTON 6,3mm	242

Insertion Loss

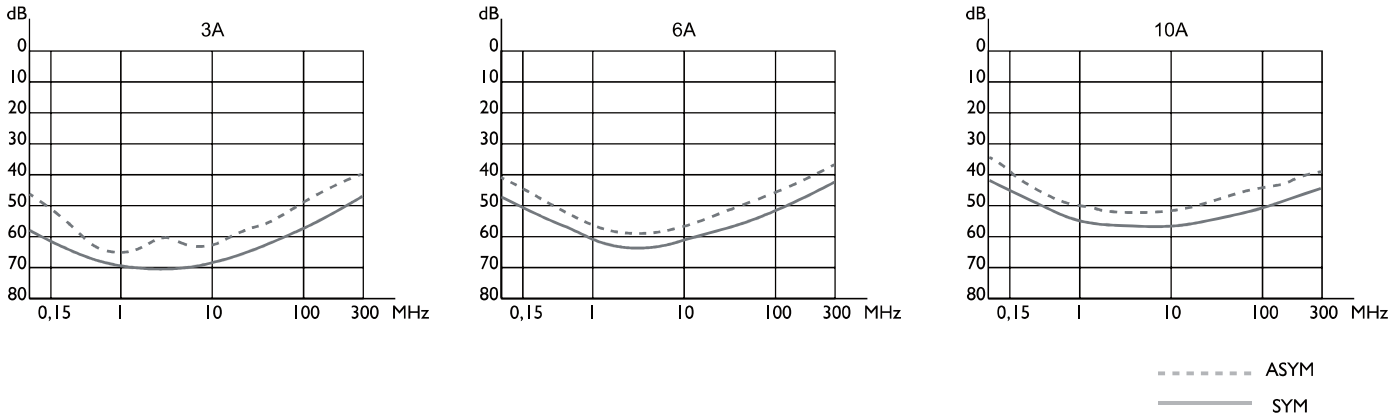

FE

High Attenuation Single Phase Filter (1-20 A)

General Purpose

Chassis mounting single stage filter.
General purpose.
Good attenuation in a wide frecuency range.
Low leakage current.

General Specifications

Maximum operating voltage: 250Vac.
Operating frequency: DC - 60Hz.
Hipot test voltage:
L/N->PE: 1800Vac 2s.
L->N: 1700 Vdc 2s.
Application class:
HPF Acc. TO DIN 40040 (-25°C/+85°C/95% RH, 30d).
Flammability class: UL 94 V2.

EN60939-2

Electrical schematics

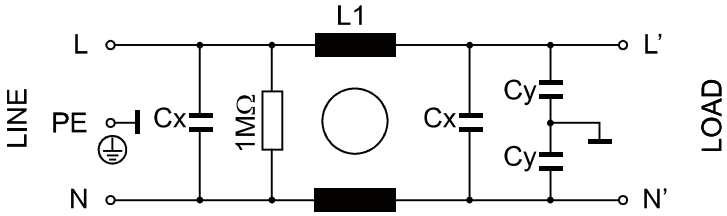

Product List

TYPE	I	L1	CX	C Y	HOUSING	LCURRENT	CONNECTION	WEIGHT ±g
FE-1X	1 Amp	3 mH	100 nF	4,7 nF	211	0,45 mA	AWG18 wire	133
FE-1Z					210		FASTON 6,3mm	119
FE-3X	3 Amp	2 mH	100 nF	4,7 nF	211	0,45 mA	AWG18 wire	114
FE-3Z					210		FASTON 6,3mm	108
FE-6X	6 Amp	0,75 mH	100 nF	4,7 nF	211	0,45 mA	AWG18 wire	115
FE-6Z					210		FASTON 6,3mm	109
FE-10X	10 Amp	1 mH	100 nF	4,7 nF	211	0,45 mA	AWG18 wire	136
FE-10Z					210		FASTON 6,3mm	130
FE-20W	20 Amp	0,48 mH	100 nF	4,7 nF	223	0,45 mA	M6 SCREW	561
FE-20Z					216		FASTON 6,3mm	429
FE-30W	30 Amp	0,48 mH	100 nF	4,7 nF	223	0,45 mA	M6 SCREW	647

Insertion Loss

ASYM
SYM

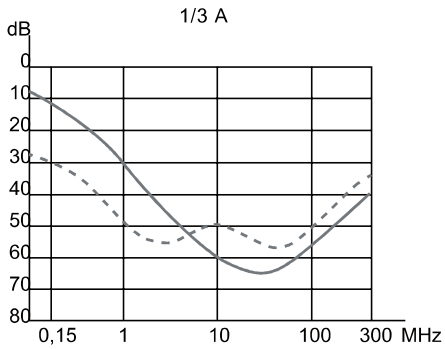

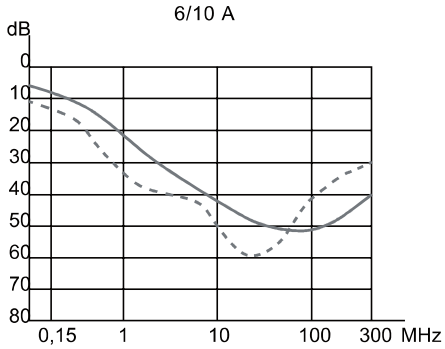

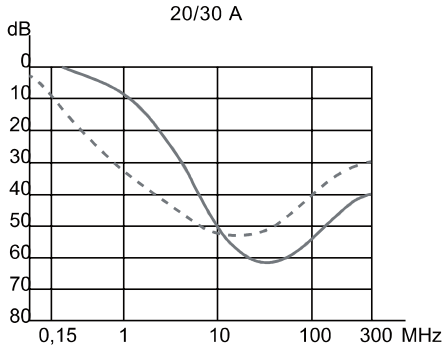

FEH

High Attenuation Single Phase Filter (1.30A)

General Purpose

Chassis mounting single stage filter.
High attenuation for noisy circuits.
Low leakage current.

EN60939-2

General Specifications

Maximum operating voltage: 250Vac.
Operating frequency: DC - 60Hz.
Hipot test voltage:
L/N->PE: 1800Vac 2s.
L->N: 1700 Vdc 2s.
Application class:
HPF Acc. TO DIN 40040
(-25°C/+85°C/95% RH, 30d).
Flammability class: UL 94 V2.

Electrical schematics

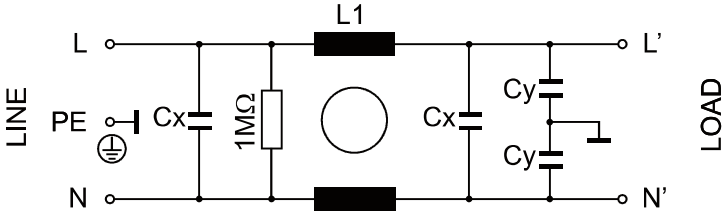

Product List

TYPE	I	L1	CX	C Y	HOUSING	LCURRENT	CONNECTION	WEIGHT ±g
FEH-1X	1 Amp	12 mH	150 nF	4,7 nF	209	0,45 mA	AWG18 wire	106
FEH-1Z					208		FASTON 6,3mm	100
FEH-3X	3 Amp	2,5 mH	150 nF	4,7 nF	209	0,45 mA	AWG18 wire	106
FEH-3Z					208		FASTON 6,3mm	100
FEH-6X	6 Amp	1 mH	150 nF	4,7 nF	209	0,45 mA	AWG18 wire	106
FEH-6Z					208		FASTON 6,3mm	100
FEH-10X	10 Amp	0,80 mH	150 nF	4,7 nF	209	0,45 mA	AWG18 wire	106
FEH-10Z					208		FASTON 6,3mm	100
FEH-16X	16 Amp	0,65 mH	150 nF	4,7 nF	211	0,45 mA	AWG18 wire	119
FEH-16Z					210		FASTON 6,3mm	113
FEH-20Z	20 Amp	0,60 mH	150 nF	4,7 nF	214	0,45 mA	FASTON 6,3mm	164
FEH-30W	30 Amp	0,67 mH	470 nF	10 nF	220	0,45 mA	M6 SCREW	210

Insertion Loss

ASYM
SYM

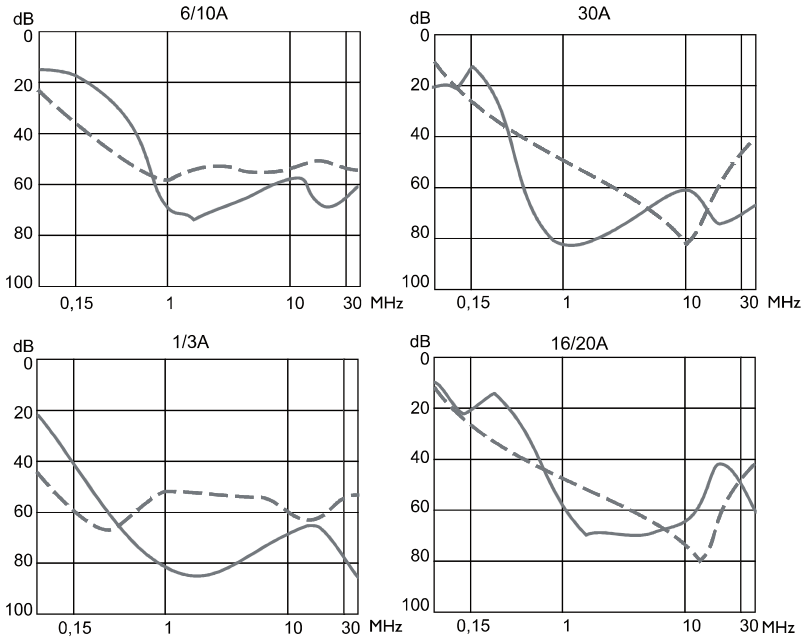

FEHV

High Attenuation Chassis Panel Mounting Single Phase Filter for Frequency Inverters (6-30A)

Electrical schematics

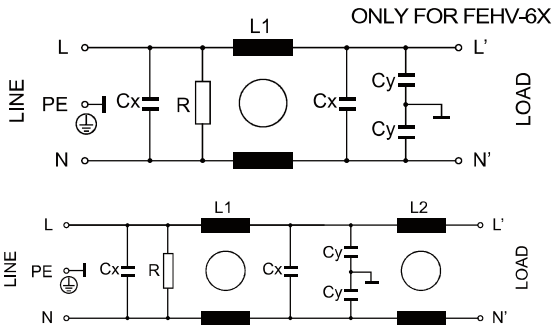

EN60939-2

For single phase frecuency inverters

Double stage filter.
Special performance for single phase frecuency inverters.
Very high asymmetrical attenuation.

General Specifications

Maximum operating voltage: 250Vac.
Operating frequency: DC - 60Hz.
Hipot test voltage: L/N-›PE: 1800Vac 2s.
L-›N: 1700 Vdc 2s.
Application class:HPF Acc. TO DIN 40040 (-25°C/+85°C/95% RH, 30d).
Flammability class: UL 94 V2.

Product List

TYPE	I	L1	L2	R (Ω)	CX	C Y	HOUSING	LCURRENT	CONNECTION	WEIGHT ±g
FEHV-6B		6 mH					224		4mm2	530
FEHV-6X	6 Amp	10 mH	25,6 µH	680 K	940 nF	47 nF	215	4,54 mA	AWG18 WIRE	425
FEHV-6Z		6 mH					221		FASTON 6,3mm	420
FEHV-10B	10 Amp	6 mH	25,6 µH	680 K	940 nF	47 nF	224	4,54 mA	4mm2	600
FEHV-10Z							221		FASTON 6,3mm	500
FEHV-16B	16 Amp	4 mH	25,6 µH	470 K	2 µF	100 n F	224	9,67 mA	4mm2	650
FEHV-16Z							221		FASTON 6,3mm	545
FEHV-20B	20 Amp	3,5 mH	25,6 µH	470 K	2 µF	100 nF	272	9,67 mA	4mm2	710
FEHV-30B	30 Amp	2 mH	25,6 µH	220 K	2 µF	100 nF	272	9,67 mA	6mm2	720

Insertion Loss

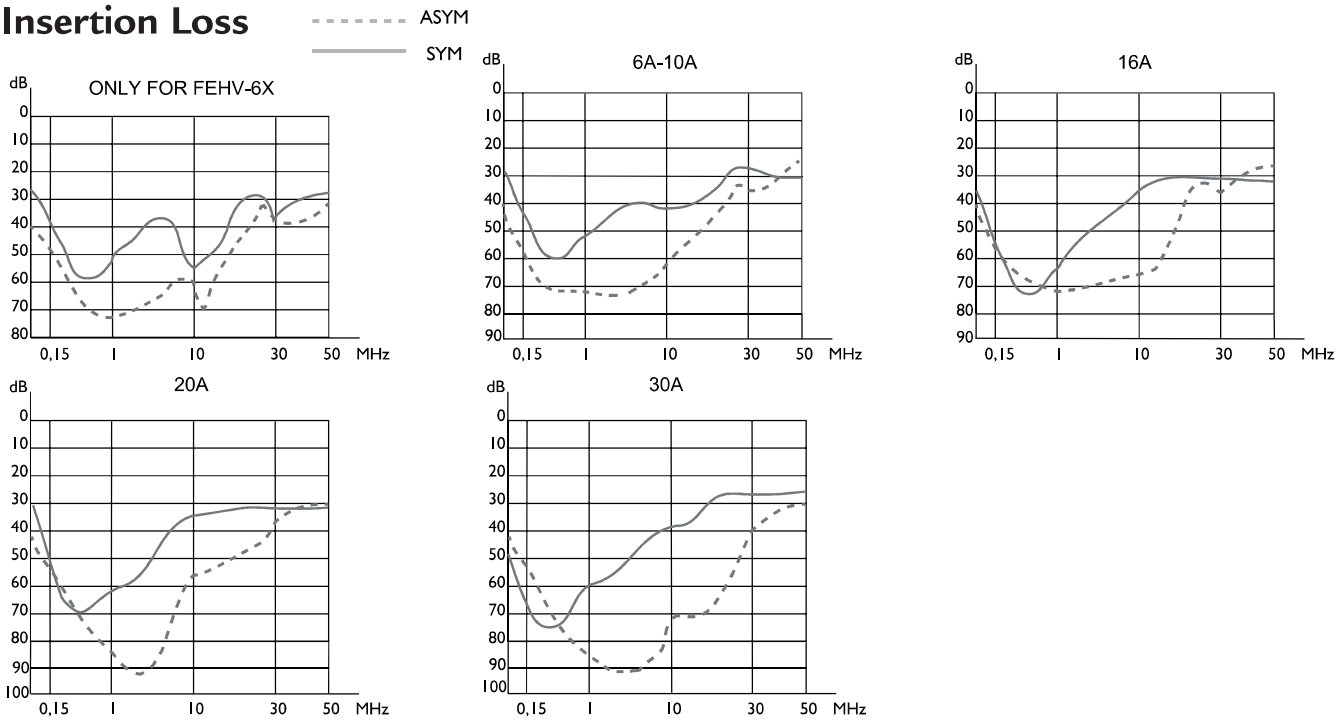

FF

Very High Attenuation Chassis Panel Mounting Single Phase Filter (3-20A)

Electrical schematics

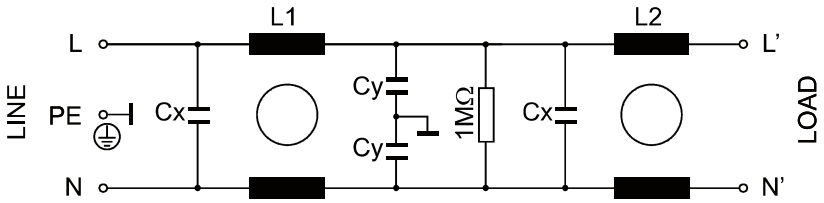

EN60939-2

General Specifications

Maximum operating voltage: 250Vac.
Operating frequency: DC - 60Hz.
Hipot test voltage:
L/N->PE: 1800Vac 2s.
L->N: 1700 Vdc 2s.
Application class:
HPF Acc. TO DIN 40040
(-25°C/+85°C/95% RH, 30d).
Flammability class: UL 94 V2.

General Purpose

Double stage filter.
High insertion loss.
General purpose filter.

Product List

TYPE	I	L1	L2	CX	C Y	HOUSING	LCURRENT	CONNECTION	WEIGHT ±g
FF-3X	3 Amp	2 mH	2 mH	100 nF	2,2 nF	215	0,21 mA	AWG18 WIRE	170
FF-3Z						214		FASTON 6,3mm	165
FF-6X	6 Amp	0,75 mH	0,75 mH	100 nF	2,2 nF	215	0,21 mA	AWG18 WIRE	172
FF-6Z						214		FASTON 6,3mm	166
FF-10Z	10 Amp	0,50 mH	0,50 mH	100 nF	2,2 nF	216	0,21 mA	FASTON 6,3mm	223
FF-20W	20 Amp	0,48 mH	0,48 mH	100 nF	2,2 nF	223	0,21 mA	M6 SCREW	564
FF-20Z						221		FASTON 6,3mm	429

Insertion Loss

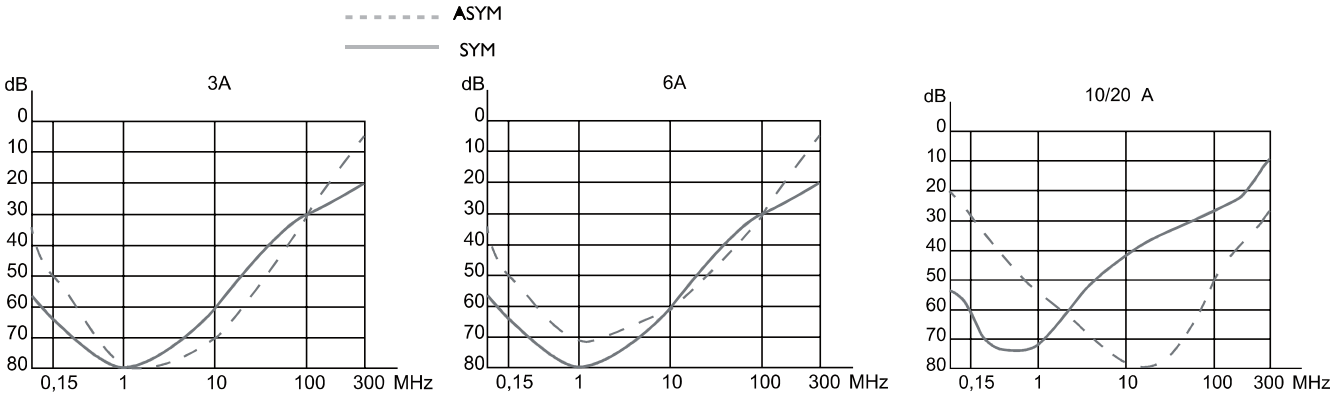

FFH

Very High Attenuation Chassis Panel Mounting Single Phase Filter (1-16A)

Electrical schematics

ONLY FOR FFH - 1X/Z and -3X/Z

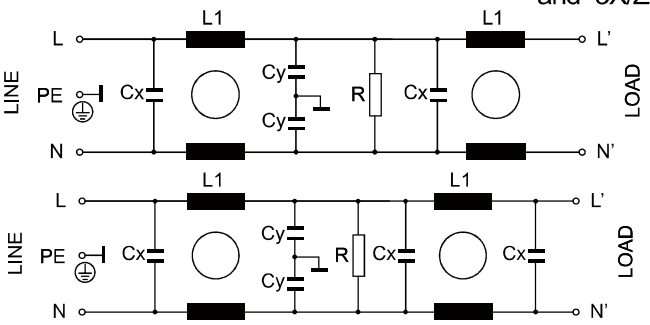

EN60939-2

General Purpose

Double stage filter.
Very high attenuation
(Symmetrical and asymmetrical).
For application with high EMI levels.

General Specifications

Maximum operating voltage: 250Vac.
Operating frequency: DC - 60Hz.
Hipot test voltage: L/N->PE: 1800Vac 2s.
L->N: 1700 Vdc 2s.
Application class: HPF Acc. TO DIN 40040 (-25°C/+85°C/95% RH, 30d).
Flammability class: UL 94 V2.

Product List

TYPE	I	L1	CX	C Y	R (Ω)	HOUSING	LCURRENT	CONNECTION	WEIGHT ±g
FFH-1X	1 Amp	22 mH	330 nF	4,7 nF	1M	215	0,45mA	AWG18 WIRE	170
FFH-1Z						214		FASTON 6,3mm	164
FFH-3X	3 Amp	10 mH	470 nF	4,7 nF	470K	217	0,45mA	AWG18 WIRE	205
FFH-3Z						216		FASTON 6,3mm	199
FFH-6X	6 Amp	7,8 mH	1 µF	4,7 nF	220K	219	0,45mA	AWG18 WIRE	260
FFH-6Z						218		FASTON 6,3mm	250
FFH-10X	10 Amp	4,5 mH	1 µF	4,7 nF	220K	219	0,45mA	AWG18 WIRE	260
FFH-10Z						218		FASTON 6,3mm	250
FFH-12X	12 Amp	3,25 mH	1 µF	4,7 nF	220K	219	0,45mA	AWG18 WIRE	260
FFH-12Z						218		FASTON 6,3mm	250
FFH-16X	16 Amp	2 mH	1 µF	4,7 nF	220K	223	0,45mA	AWG18 WIRE	510
FFH-16Z						221		FASTON 6,3mm	500

Insertion Loss

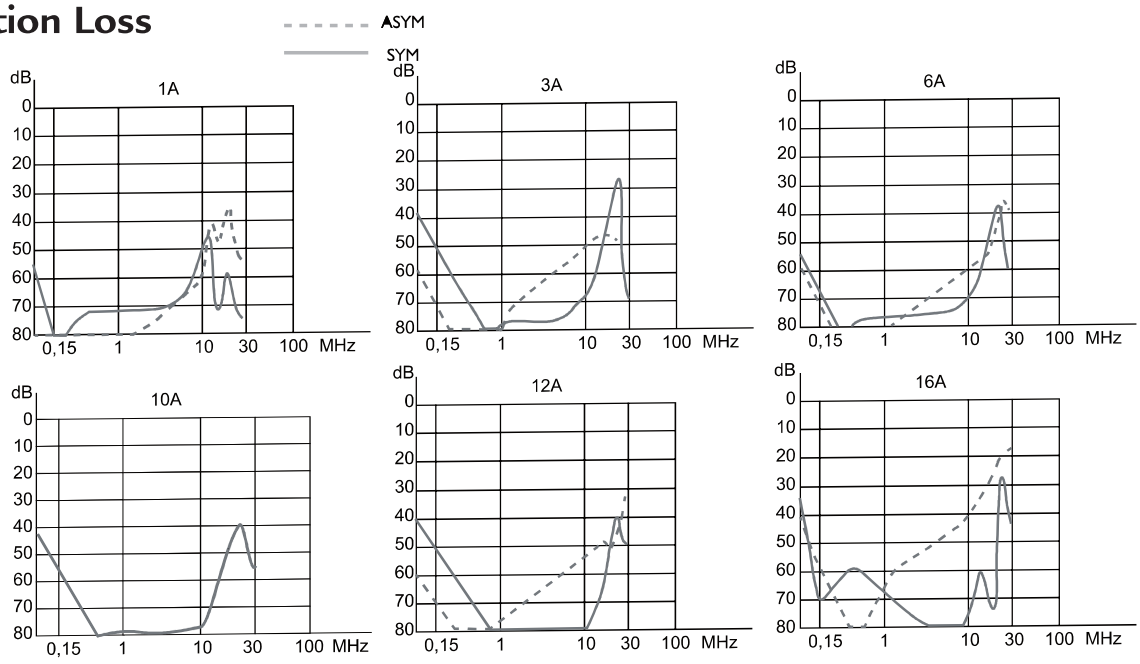

FFHV

Very High Attenuation Chassis Panel Mounting Single Phase Filter for Frequency Inverters (6-30A)

Electrical schematics

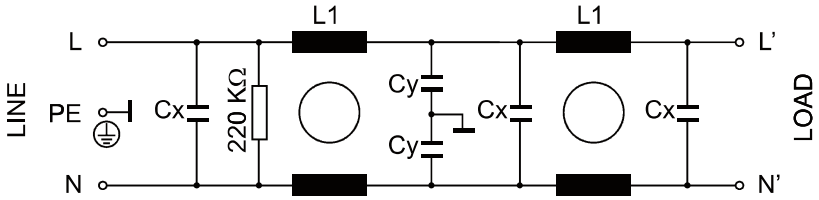

General Specifications

Maximum operating voltage: 250Vac.
Operating frequency: DC - 60Hz
Hipot test voltage:
L/N->PE: 1800Vac 2s.
L->N: 1700 Vdc 2s.
Application class:
HPF Acc. TO DIN 40040
(-25°C/+85°C/95% RH, 30d).
Flammability class: UL 94 V2.

For single phase frequency inverters

Double stage filter.
Special high performance for single phase frequency inverters.
Very high attenuation.

Product List

TYPE	I	L1	CX	C Y	HOUSING	LCURRENT	CONNECTION	WEIGHT ±g
FFHV-6Z	6 Amp	7,8 mH	1 µF	4,7 nF	218	0,45mA	FASTON 6,3mm	380
FFHV-10Z	10 Amp	4,5 mH	1 µF	4,7 nF	271	0,45mA	FASTON 6,3mm	430
FFHV-12Z	12 Amp	3,25 mH	1 µF	4,7 nF	271	0,45mA	FASTON 6,3mm	635
FFHV-16Z	16 Amp	2,8 mH	1 µF	4,7 nF	225	0,45mA	FASTON 6,3mm	985
FFHV-25B	25 Amp	1,6 mH	2,2 µF	33 nF	272	3,19mA	4mm2	1120
FFHV-30B	30 Amp	1,6+0,8 mH	2,2 µF	33 nF	273	3,19mA	6mm2	1300

Insertion Loss

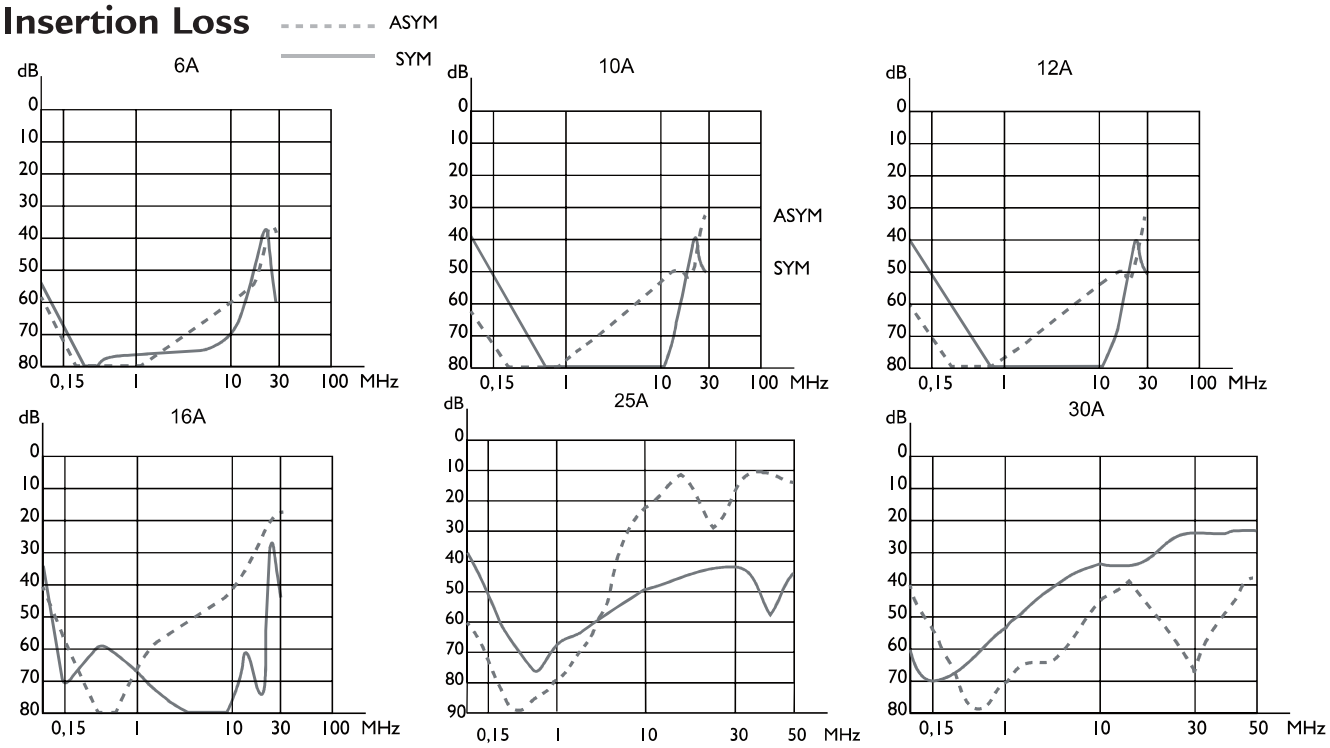

FG/FGR

Chassis Panel Mounting Medical Use Single Phase Filter (3-6A)

Electrical schematics

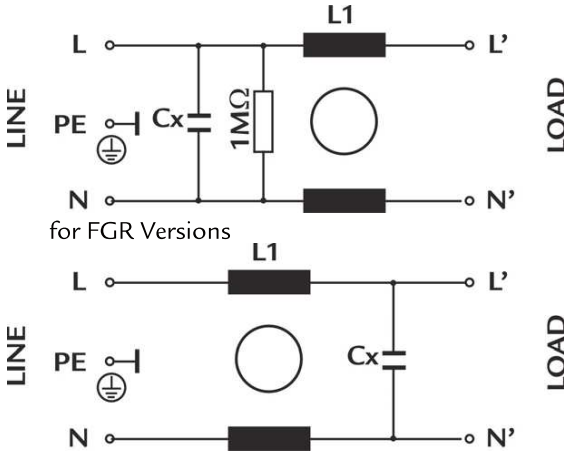

General Purpose

Filter for electromedical equipment.
Small size.
FGR: With bleeder resistor.
ZT: IEC connector version.
V: PCB mounting version.

General Specifications

Maximum operating voltage: 250Vac.
Operating frequency: DC - 60Hz.
Hipot test voltage: L/N->PE: 2500Vac 2s.
L->N: 1700 Vdc 2s.
Application class:
HPF Acc. TO DIN 40040 (-25°C/+85°C/95%RH,30d)
Flammability class: UL 94 V2.

Product List

TYPE	I	L1	CX	HOUSING	LCURRENT	CONNECTION	WEIGHT ±g
FG-3Z				203		FASTON 6,3mm	48
FG-3V	3 Amp	0,8 mH	10 nF	205	5µA	1,3 mm PIN	45
FG-3X				204		AWG18 WIRE	54
FG-3ZT				241		FASTON 6,3mm	54
FG-6Z				203		FASTON 6,3mm	49
FG-6V	6 Amp	0,45 mH	10 nF	205	5µA	1,3 mm PIN	38
FG-6X				204		AWG18 WIRE	55
FG-6ZT				241		FASTON 6,3mm	54
FGR-3Z				203		FASTON 6,3mm	48
FGR-3ZT	3 Amp	0,8 mH	10 nF	241	5µA	FASTON 6,3mm	54
FGR-3V				205		1,3 mm PIN	45
FGR-3X				204		AWG18 WIRE	54
FGR-6Z				203		FASTON 6,3mm	49
FGR-6ZT	6 Amp	0,45 mH	10 nF	241	5µA	FASTON 6,3mm	54
FGR-6V				205		1,3 mm PIN	38
FGR-6X				204		AWG18 WIRE	55

Insertion Loss

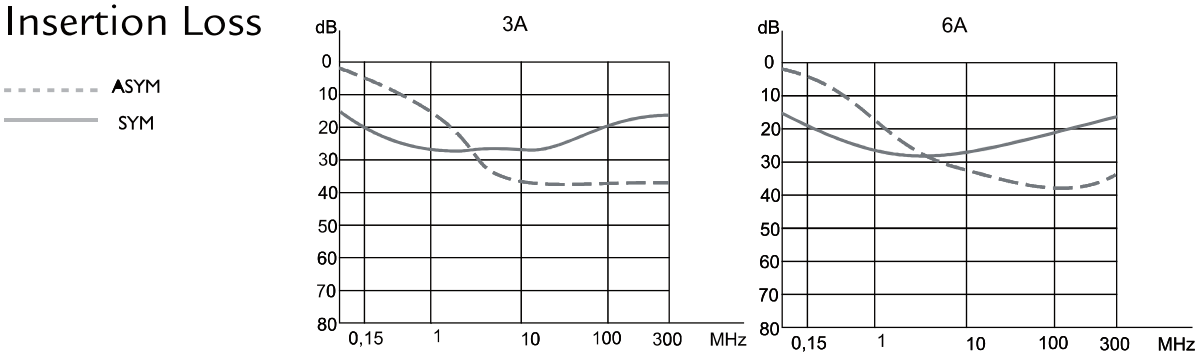

FL

Single Phase Chassis Panel SMPS Filter (1-10A)

For equipment using s.m.p.s

High attenuation for switching power supplies.
Double stage filter.
Very high asymmetrical attenuation.

EN60939-2

General Specifications

Maximum operating voltage: 250Vac.
Operating frequency: DC - 60Hz.
Hipot test voltage:
L/N->PE: 1800Vac 2s.
L->N: 1700 Vdc 2s.
Application class:
HPF Acc. TO DIN 40040
(-25°C/+85°C/95% RH, 30d).
Flammability class: UL 94 V2.

Electrical schematics

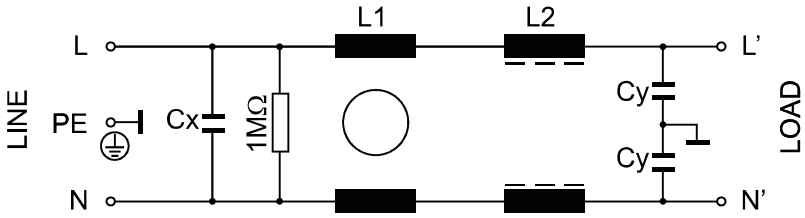

Product List

TYPE	I	L1	L2	CX	CY	HOUSING	LCURRENT	CONNECTION	WEIGHT ±g
FL-1X	1 Amp	22 mH	1,2 mH	0,22 µF	4,7 nF	213	0,45 mA	AWG18 WIRE	129
FL-1Z						212		FASTON 6,3mm	125
FL-3X	3 Amp	16 mH	0,03 mH	0,22 µF	4,7 nF	213	0,45 mA	AWG18 WIRE	129
FL-3Z						212		FASTON 6,3mm	125
FL-3ZH	3 Amp	16 mH	0,25 mH	0,22 µF	4,7 nF	216	0,45 mA	FASTON 6,3mm	131
FL-4X	4 Amp	8 mH	0,06 mH	1 µF	22 nF	217	2,12 mA	AWG18 WIRE	137
FL-4Z						216		FASTON 6,3mm	131
FL-6Z	6 Amp	4 mH	0,1 mH	0,47 µF	22 nF	221	2,12 mA	FASTON 6,3mm	500
FL-10Z	10 Amp	4 mH	0,1 mH	0,47 µF	22 nF	221	2,12 mA	FASTON 6,3mm	500

Insertion Loss

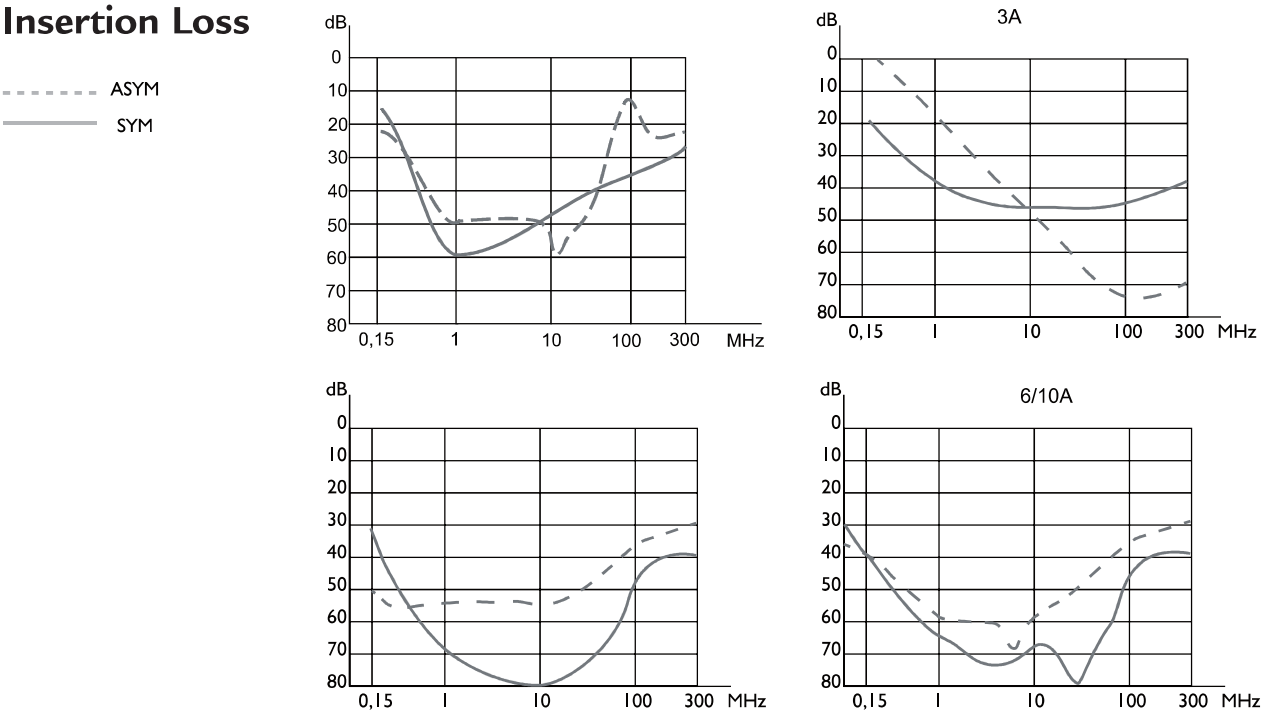

FR-FRR

Single Phase Chassis Panel Mounting Filter (1-30A)

For equipment using s.m.p.s

Chassis mounting filter for general purpose applications.
Single stage filter.
Low leakage current.

EN60939-2

General Specifications

Maximum operating voltage: 250Vac.
Operating frequency: DC - 60Hz.
Hipot test voltage:
L/N->PE: 1800Vac 2s.
L->N: 1700 Vdc 2s.
Application class:
HPF Acc. TO DIN 40040
(-25°C/+85°C/95% RH, 30d).
Flammability class: UL 94 V2.

Electrical schematics

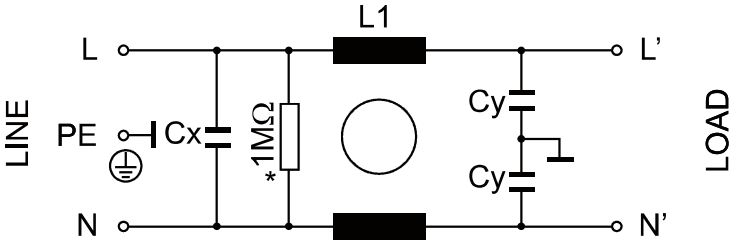

*Only for FRR versions

Product List

TYPE	I	L1	CX	CY	HOUSING	LCURRENT	CONNECTION	WEIGHT ±g
FR-1X	1 Amp	3 mH	33 nF	2,2 nF	207	0,21 mA	AWG18 WIRE	53
FR-1Z					206		FASTON 6,3mm	47
FR-3X	3 Amp	2 mH	33 nF	2,2 nF	207	0,21 mA	AWG18 WIRE	56
FR-3Z					206		FASTON 6,3mm	48
FR-6X	6 Amp	0,8 mH	33 nF	2,2 nF	207	0,21 mA	AWG18 WIRE	60
FR-6Z					206		FASTON 6,3mm	49
FR-10X	10 Amp	0,45 mH	33 nF	2,2 nF	209	0,21 mA	AWG18 WIRE	90
FR-10Z					208		FASTON 6,3mm	83
FR-20W	20 Amp	0,45 mH	33 nF	2,2 nF	217	0,21 mA	M6 SCREW	510
FR-20Z					216		FASTON 6,3mm	190
FR-30W	30 Amp	0,60 mH	33 nF	2,2 nF	223	0,21 mA	M6 SCREW	515
FRR-1X	1 Amp	3 mH	33 nF	0,47 nF	207	0,45 mA	AWG18 WIRE	53
FRR-1Z					206		FASTON 6,3mm	47
FRR-3X	3 Amp	2 mH	33 nF	0,47 nF	207	0,45 mA	AWG18 WIRE	56
FRR-3Z					206		FASTON 6,3mm	48
FRR-6X	6 Amp	0,8 mH	33 nF	0,47 nF	207	0,45 mA	AWG18 WIRE	60
FRR-6Z					206		FASTON 6,3mm	49
FRR-10X	10 Amp	0,75 mH	33 nF	0,47 nF	209	0,45 mA	AWG18 WIRE	83
FRR-10Z					208		FASTON 6,3mm	90

Insertion Loss

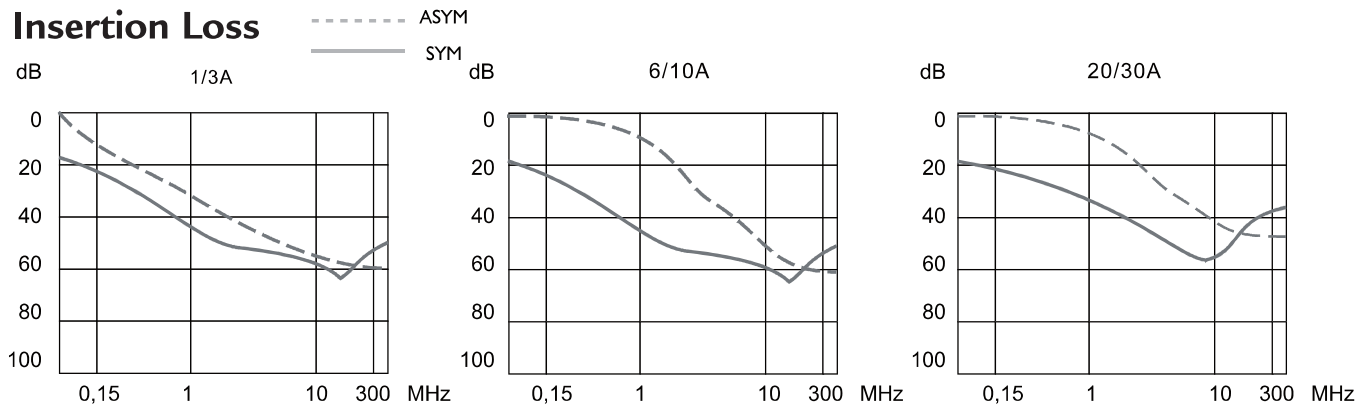

PE

Plastic Case Filter for PCB Mounting Filter (0.5-6A)

Electrical schematics

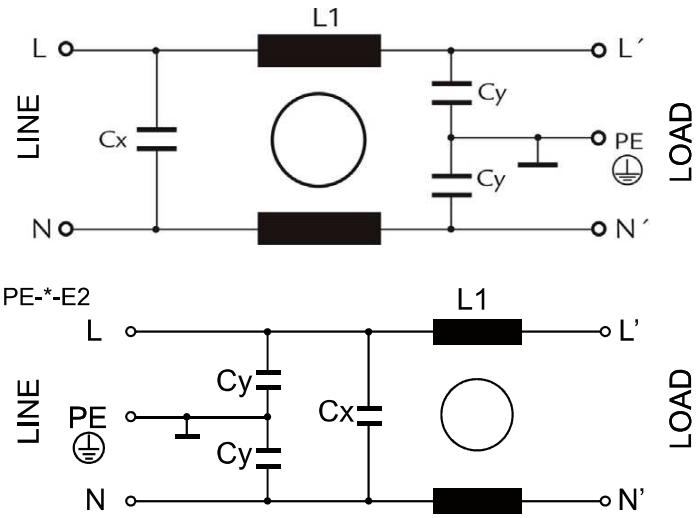

General Specifications

Maximum operating voltage: 250Vac.
Operating frequency: DC - 60Hz.
Hipot test voltage: L/N-›PE: 1800Vac 2s.
L-›N: 1700 Vdc 2s.
Application class: HPF Acc. TO DIN 40040 (-25°C/+85°C/95% RH, 30d).
Flammability class: UL 94 V2.

General Purpose

Plastic case filter for PCB mounting.
Low cost and space saving filter.
Good attenuation for wide frequency range.
Low leakage current < 0,25 mA.
For digital logic circuits.

Product List

TYPE	I	L1	CX	CY	HOUSING	LCURRENT	CONNECTION	WEIGHT ±g
PE-05V	0,5 Amp	20 mH	10 nF	2,2 nF	201	0,21 mA	PIN 0,8mm	27
PE-05V-E2					202		PIN 0,8mm	
PE-1V	1 Amp	10 mH	10 nF	2,2 nF	201	0,21 mA	PIN 0,8mm	28
PE-1V-E2					202		PIN 0,8mm	
PE-3V	3 Amp	1,3 mH	10 nF	2,2 nF	201	0,21 mA	PIN 0,8mm	28
PE-3V-E2					202		PIN 0,8mm	
PE-6V	6 Amp	0,8 mH	10 nF	2,2 nF	201	0,21 mA	PIN 0,8mm	27
PE-6V-E2					202		PIN 0,8mm	83

Insertion Loss

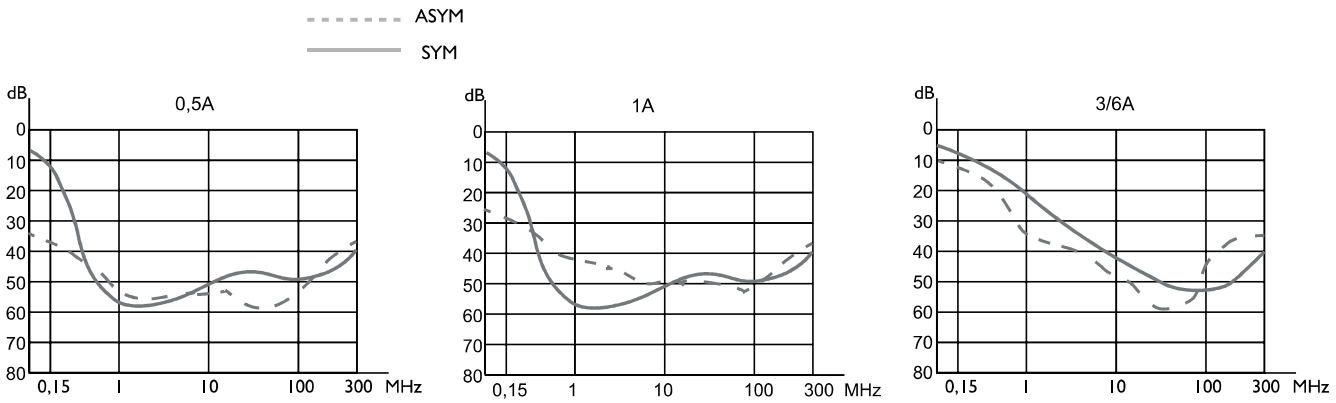

PF

General Purpose Single Phase Filter (50-150A)

General Purpose

Chasis mounting single stage filter
for general purpose.
High current.

General Specifications

Maximum operating voltage: 250Vac.
Operating frequency: DC - 60Hz.
Hipot test voltage:
L/N->PE: 1800Vac 2s.
L->N: 1700 Vdc 2s.
Application class:
HPF Acc. TO DIN 40040
(-25°C/+85°C/95% RH, 30d).
Flammability class:UL 94 V2.

Electrical schematics

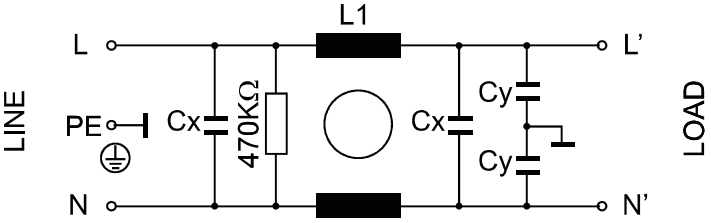

Product List

TYPE	I	L1	CX	CY	HOUSING	LCURRENT	CONNECTION	WEIGHT ±g
PF-50W	50 Amp	0,45 mH	2,2 µF	10 nF	274	0,97mA	M6 SCREW	3350
PF-100W	100 Amp	0,31 mH	2,2 µF	10 nF	274	0,97mA	M6 SCREW	3950
PF-150W	150 Amp	0,28 mH	2,2 µF	10 nF	275	0,97mA	M10 SCREW	3950

Insertion Loss

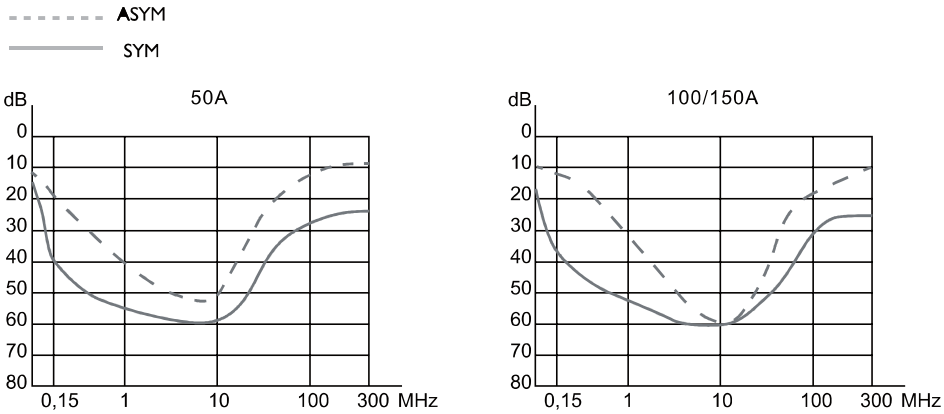

FD/FDC/FDV

IEC Connector Filter (1-6A)

Electrical schematics

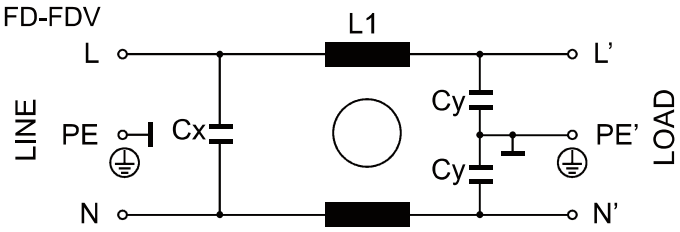

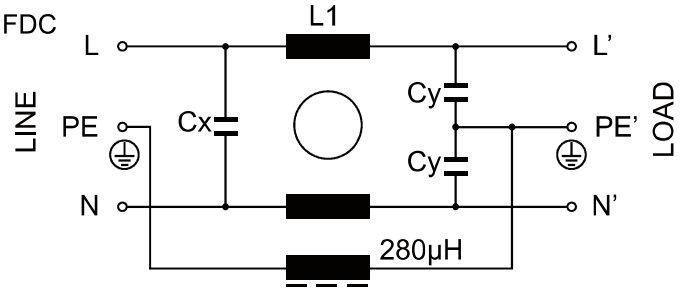

IEC connector filter

IEC connector filter. General purpose.
FD: IEC connector filter.
FDC: With earth inductor. High immunity.
FDV: With voltage protection.

General Specifications

Maximum operating voltage: 250Vac.
Operating frequency: DC - 60Hz.
Hipot test voltage: L/N-›PE: 1800Vac 2s.
L-›N: 1700 Vdc 2s.
Application class:
HPF Acc. TO DIN 40040
(-25°C/+85°C/95% RH, 30d).
Flammability class: UL 94 V2.

Product List

TYPE	I	L1	CX	CY	HOUSING	LCURRENT	CONNECTION	WEIGHT ±g
FD-1X	1 Amp	2 mH	10 nF	2,2 nF	242	0,21mA	AWG18 WIRE	62
FD-1Z					241		FASTON 6,3mm	50
FD-3X	3 Amp	1,3 mH	10 nF	2,2 nF	242	0,21mA	AWG18 WIRE	52
FD-3Z					241		FASTON 6,3mm	51
FD-6X	6 Amp	0,8 mH	10 nF	2,2 nF	242	0,21mA	AWG18 WIRE	62
FD-6Z					241		FASTON 6,3mm	55
FDC-1X	1 Amp	2 mH	10 nF	2,2 nF	244	0,21mA	AWG18 WIRE	110
FDC-1Z					243		FASTON 6,3mm	100
FDC-3X	3 Amp	1,3 mH	10 nF	2,2 nF	244	0,21mA	AWG18 WIRE	102
FDC-3Z					243		FASTON 6,3mm	92
FDC-6X	6 Amp	0,8 mH	10 nF	2,2 nF	244	0,21mA	AWG18 WIRE	120
FDC-6Z					243		FASTON 6,3mm	110
FDV-1X	1 Amp	2 mH	10 nF	2,2 nF	244	0,21mA	AWG18 WIRE	110
FDV-1Z					243		FASTON 6,3mm	100
FDV-3X	3 Amp	1,3 mH	10 nF	2,2 nF	244	0,21mA	AWG18 WIRE	102
FDV-3Z					243		FASTON 6,3mm	92
FDV-6X	6 Amp	0,8 mH	10 nF	2,2 nF	244	0,21mA	AWG18 WIRE	120
FDV-6Z					243		FASTON 6,3mm	110

Insertion Loss

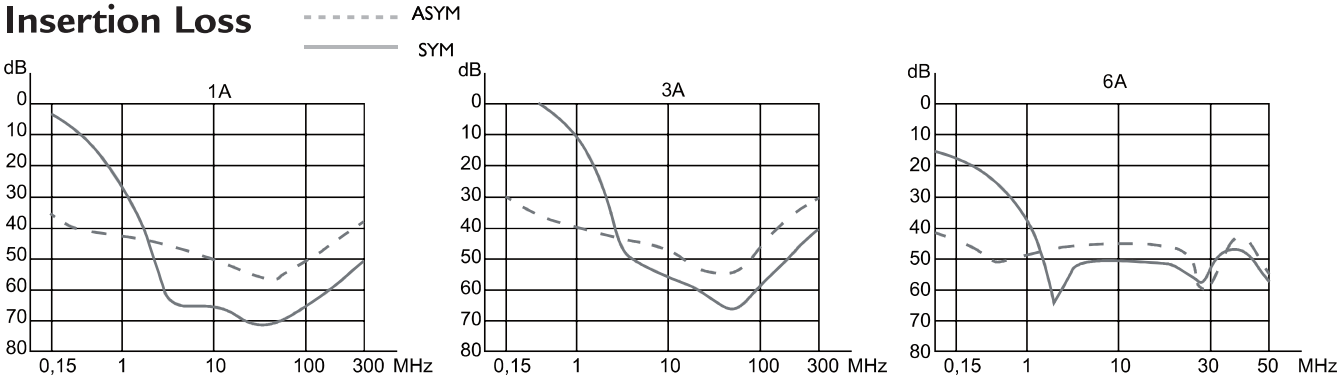

FI

Chassis Panel with IEC Connector Fused Filter (1-6A)

Electrical schematics

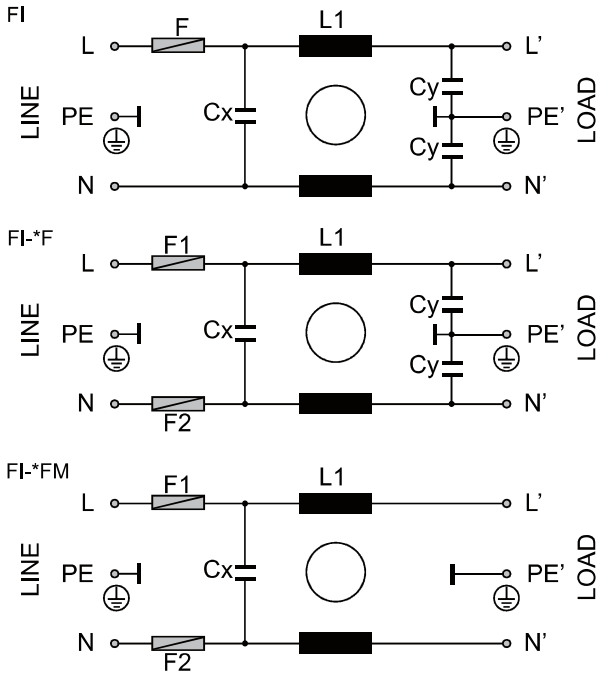

EN60939-2

IEC Connector Filter

With IEC connector and fuse.
Small size.
F: With two fuses.
FM: With two fuses for electromedical applications.

General Specifications

Maximum operating voltage: 250Vac.
Operating frequency: DC - 60Hz.
Hipot test voltage: L/N->PE: 1800Vac 2s.
(2500Vac for M version)
L->N: 1700 Vdc 2s.
Application class: HPF Acc. TO DIN 40040 (-25°C/+85°C/95% RH, 30d).
Flammability class: UL 94 V2.

Product List

TYPE	I	L1	CX	CY	HOUSING	LCURRENT	CONNECTION	WEIGHT ±g
FI-2X	2 Amp	2 mH	100 nF	2,2 nF	248	0,21mA	AWG18 WIRE	86
FI-2Z					247		FASTON 6,3mm	80
FI-4X	4 Amp	1,3 mH	100 nF	2,2 nF	248	0,21mA	AWG18 WIRE	86
FI-4Z					247		FASTON 6,3mm	80
FI-6X	6 Amp	0,8 mH	100 nF	2,2 nF	248	0,21mA	AWG18 WIRE	86
FI-6Z					247		FASTON 6,3mm	80
FI-2XFM	2 Amp	2 mH	100 nF	-	246	5µA	AWG18 WIRE	92
FI-2ZFM					245		FASTON 6,3mm	86
FI-4XFM	4 Amp	1,3 mH	100 nF	-	246	5µA	AWG18 WIRE	92
FI-4ZFM					245		FASTON 6,3mm	86
FI-6XFM	6 Amp	0,8 mH	100 nF	-	246	5µA	AWG18 WIRE	92
FI-6ZFM					245		FASTON 6,3mm	86

Insertion Loss

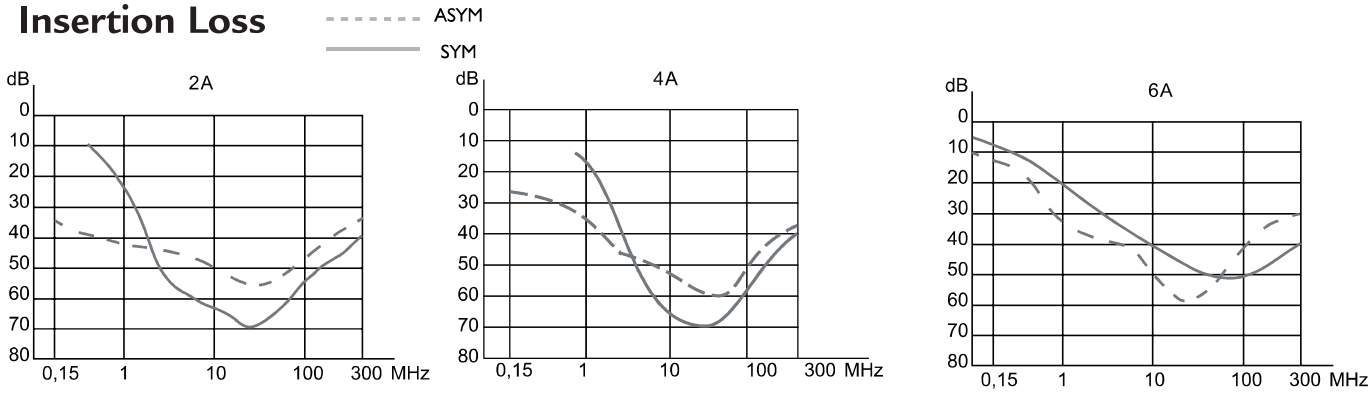

FT/FTO

IEC Connector Filter (1-6A)

Electrical schematics

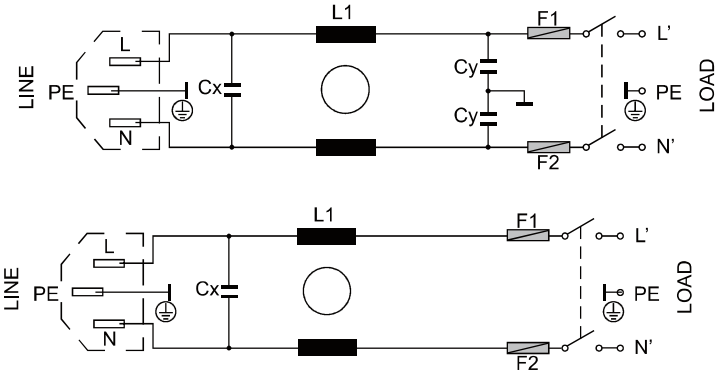

Only for-ZM versions

FT snap-in

FTO screw fixing

Wiring, selector and fuse holder can be supplied or request

General Specifications

Maximum operating voltage: 250Vac.
Operating frequency: DC - 60Hz.
Hipot test voltage: L/N->PE: 1800Vac 2s.
(2500Vac for M version)
L->N: 1700 Vdc 2s.
Application class: HPF Acc. TO DIN 40040 (-25°C/+85°C/95% RH, 30d).
Flammability class: UL 94 V2.

IEC Connector Filter

With IEC connector filter, fuse and switch.
External connections by user.
Small size.
M: For electromedical applications.

Product List

TYPE	I	L1	CX	CY	HOUSING	LCURRENT	CONNECTION	WEIGHT ±g
FT-1Z	1 Amp	2 mH			252		FASTON 6,3mm	67
FT-3Z	3 Amp	1,3 mH	10 nF	2,2 nF	252	0,21mA	FASTON 6,3mm	66
FT-6Z	6 Amp	0,8 mH			252		FASTON 6,3mm	66
FT-1ZM	1 Amp	2 mH			252		FASTON 6,3mm	62
FT-3ZM	3 Amp	1,3 mH	10 nF	-	252	5µA	FASTON 6,3mm	61
FT-6ZM	6 Amp	0,8 mH			252		FASTON 6,3mm	61
FTO-1Z	1 Amp	2 mH			253		FASTON 6,3mm	85
FTO-3Z	3 Amp	1,3 mH	10 nF	2,2 nF	253	0,21mA	FASTON 6,3mm	85
FTO-6Z	6 Amp	0,8 mH			253		FASTON 6,3mm	85
FTO-1ZM	1 Amp	2 mH			253		FASTON 6,3mm	80
FTO-3ZM	3 Amp	1,3 mH	10 nF	-	253	5µA	FASTON 6,3mm	80
FTO-6ZM	6 Amp	0,8 mH			253		FASTON 6,3mm	80

Insertion Loss

ASYM
SYM

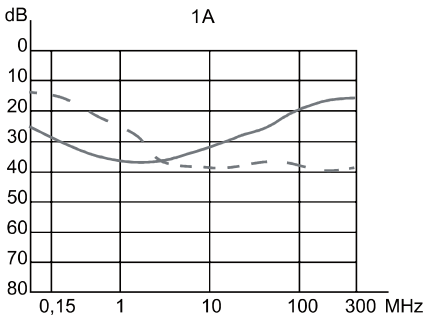

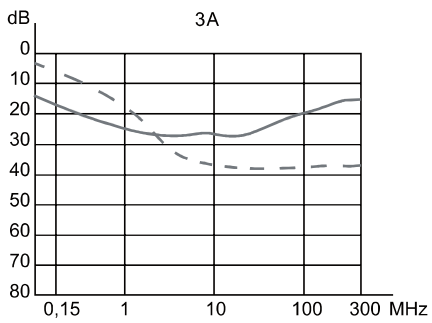

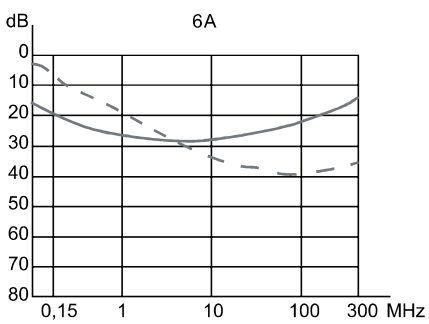

FTA

Small Size IEC Filter (3-6A)

Electrical schematics

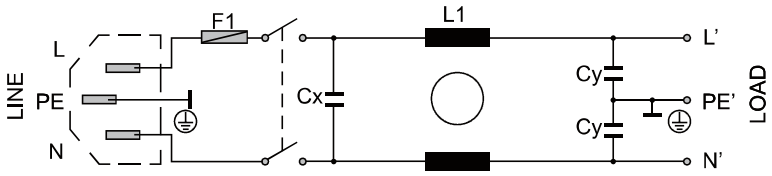

General Specifications

Maximum operating voltage: 250Vac.
Operating frequency: DC - 60Hz.
Hipot test voltage: L/N-›PE: 1800Vac 2s.
L-›N: 1700 Vdc 2s.
Application class: HPF Acc. TO DIN 40040 (-25°C/+85°C/95% RH, 30d).
Flammability class: UL 94 V2.

IEC filter small size

With IEC connector filter, fuse and switch.
External connections by user.
Small size.
M: For electromedical applications

Product List

TYPE	I	L1	CX	CY	HOUSING	LCURRENT	CONNECTION	WEIGHT ±g
FTA-3Z	3 Amp	1,8 mH	100 nF	3,3 nF	254	0,45 mA	FASTON 6,3mm	64
FTA-6Z	6 Amp	0,7 mH	100 nF	3,3 nF	254	0,45 mA	FASTON 6,3mm	64

Insertion Loss

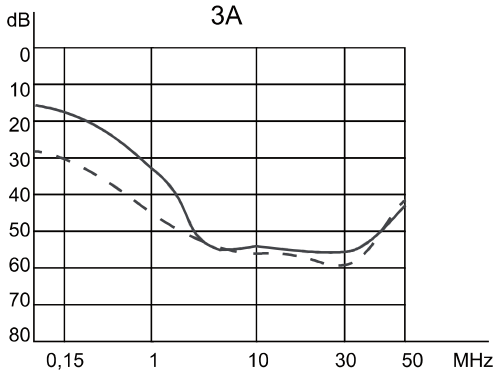

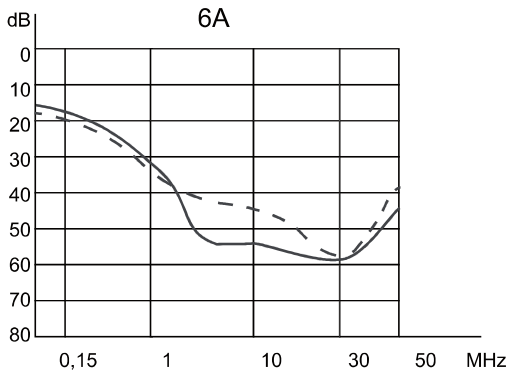

FTC

Chassis Panel with Fused IEC Connector + Switch High Attenuation Filter (1-6A)

Electrical schematics

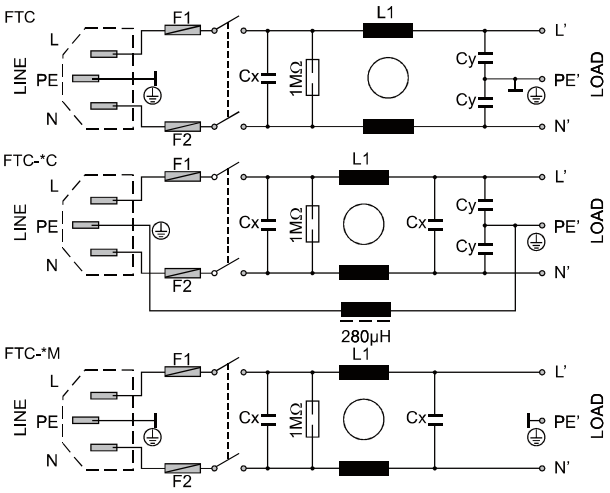

EN60939-2

IEC connector filter

Compact filter with IEC connector, fuses and switch.
High performance single stage filter.
ZM: For electromedical applications.
ZC: With earth inductor for high immunity level.

General Specifications

Maximum operating voltage: 250Vac.
Operating frequency: DC - 60Hz.
Hipot test voltage: L/N->PE: 1800Vac 2s.
(2500Vac for M version)
L->N: 1700 Vdc 2s.
Application class: HPF Acc. TO DIN 40040 (-25°C/+85°C/95% RH, 30d).
Flammability class: UL 94 V2.

Insertion Loss

ASYM
SYM

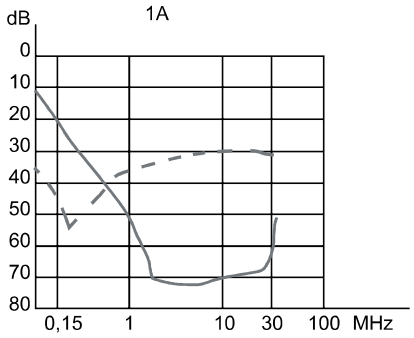

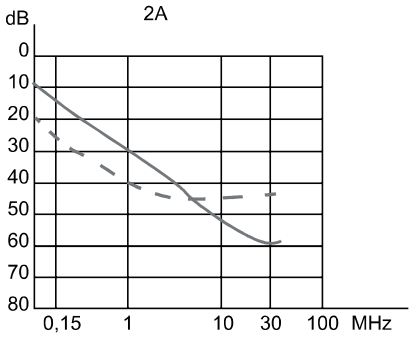

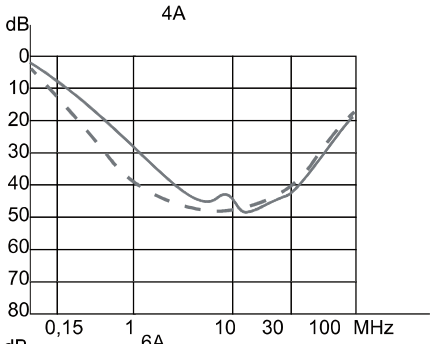

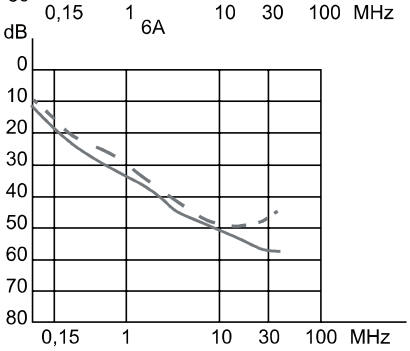

Product List

TYPE	I	L1	CX	CY	HOUSING	LCURRENT	CONNECTION	WEIGHT ±g
FTC-1Z	1 Amp	7,5 mH					FASTON 6,3mm	250
FTC-2Z	2 Amp	2 mH	220 nF	2,2 nF	249	0,21mA	FASTON 6,3mm	230
FTC-4Z	4 Amp	1 mH					FASTON 6,3mm	220
FTC-6Z	6 Amp	0,45 mH					FASTON 6,3mm	210
FTC-1ZC	1 Amp	7,5 mH					FASTON 6,3mm	265
FTC-2ZC	2 Amp	2 mH	220 nF	2,2 nF	249	0,21mA	FASTON 6,3mm	250
FTC-4ZC	4 Amp	1 mH					FASTON 6,3mm	235
FTC-6ZC	6 Amp	0,45 mH					FASTON 6,3mm	220
FTC-1ZM	1 Amp	7,5 mH					FASTON 6,3mm	240
FTC-2ZM	2 Amp	2 mH	220 nF	-	249	5µA	FASTON 6,3mm	220
FTC-4ZM	4 Amp	1 mH					FASTON 6,3mm	210
FTC-6ZM	6 Amp	0,45 mH					FASTON 6,3mm	200

FTCV

Chassis Panel with Fused IEC Connector + Switch + Voltage Selector Filter (1-6A)

Electrical schematics

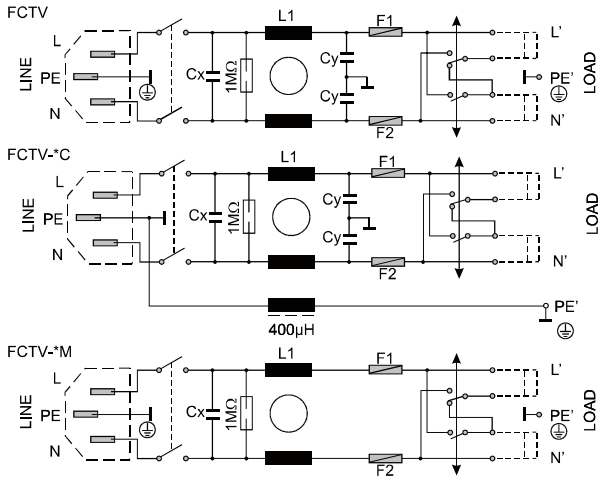

EN60939-2

General Specifications

Maximum operating voltage: 250Vac.
Operating frequency: DC - 60Hz.
Hipot test voltage: L/N->PE: 1800Vac 2s.
(2500Vac for M version)
L->N: 1700 Vdc 2s.
Application class: HPF Acc. TO DIN 40040 (-25°C/+85°C/95% RH, 30d).
Flammability class: UL 94 V2.

IEC connector filter

Compact filter with IEC connector, fuses and switch.
With voltage selector.
ZM: For electromedical applications.
ZC: With earth inductor for high immunity level.

Product List

TYPE	I	L1	CX	CY	HOUSING	LCURRENT	CONNECTION	WEIGHT ±g
FTCV-1Z	1 Amp	7,5 mH					FASTON 6,3mm	210
FTCV-3Z	3 Amp	2 mH	220 nF	3,3 nF	251	0,32mA	FASTON 6,3mm	205
FTCV-6Z	6 Amp	0,45 mH					FASTON 6,3mm	200
FTCV-1ZC	1 Amp	7,5 mH					FASTON 6,3mm	210
FTCV-3ZC	3 Amp	2 mH	220 nF	3,3 nF	251	0,32mA	FASTON 6,3mm	205
FTCV-6ZC	6 Amp	0,45 mH					FASTON 6,3mm	200
FTCV-1ZM	1 Amp	7,5 mH					FASTON 6,3mm	210
FTCV-3ZM	3 Amp	2 mH	220 nF	-	251	5µA	FASTON 6,3mm	205
FTCV-6ZM	6 Amp	0,45 mH			253		FASTON 6,3mm	200

Insertion Loss

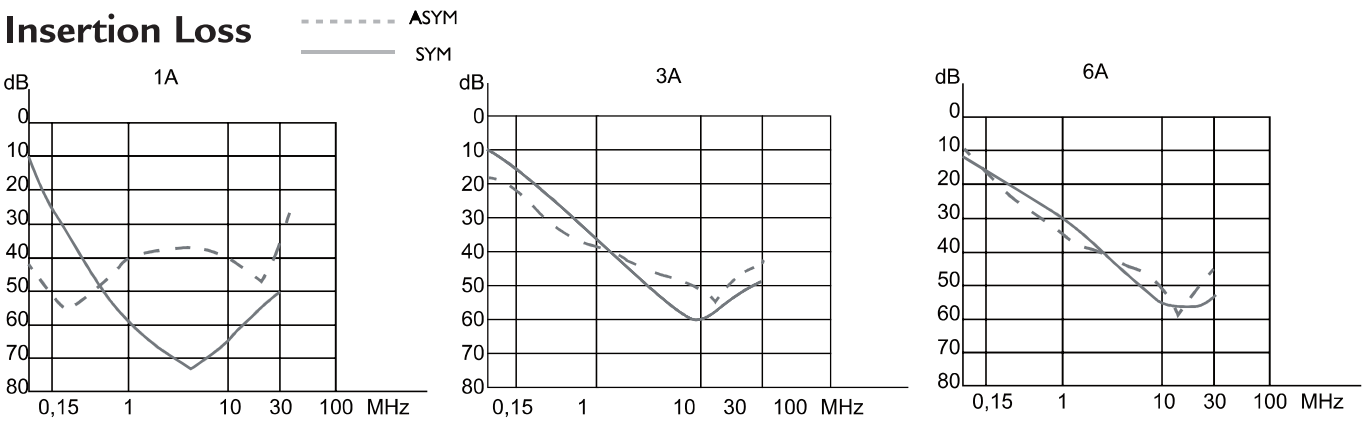

FTN

Chassis Panel with Fused IEC Connector + Switch Filter (1-6A)

Electrical schematics

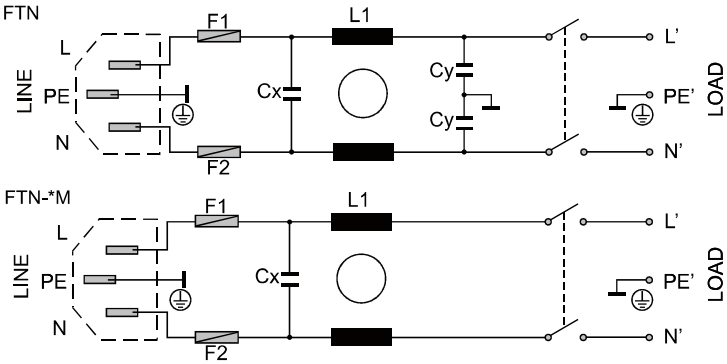

General Specifications

Maximum operating voltage: 250Vac.
Operating frequency: DC - 60Hz.
Hipot test voltage: L/N-›PE: 1800Vac 2s.
(2500Vac for M version)
L-›N: 1700 Vdc 2s.
Application class: HPF Acc. TO DIN 40040 (-25°C/+85°C/95% RH, 30d).
Flammability class: UL 94 V2.

IEC connector filter

With IEC connector, fuses and switch.
General purpose filter.
M: For electromedical applications.

Product List

TYPE	I	L1	CX	CY	HOUSING	LCURRENT	CONNECTION	WEIGHT ±g
FTN-1Z	1 Amp	2 mH					FASTON 6,3mm	110
FTN-3Z	3 Amp	1,3 mH	100 nF	2,2 nF	250	0,21mA	FASTON 6,3mm	110
FTN-6Z	6 Amp	0,8 mH					FASTON 6,3mm	110
FTN-1ZM	1 Amp	2 mH					FASTON 6,3mm	110
FTN-3ZM	3 Amp	1,3 mH	100 nF	-	250	5µA	FASTON 6,3mm	110
FTN-6ZM	6 Amp	0,8 mH			241		FASTON 6,3mm	110

Insertion Loss

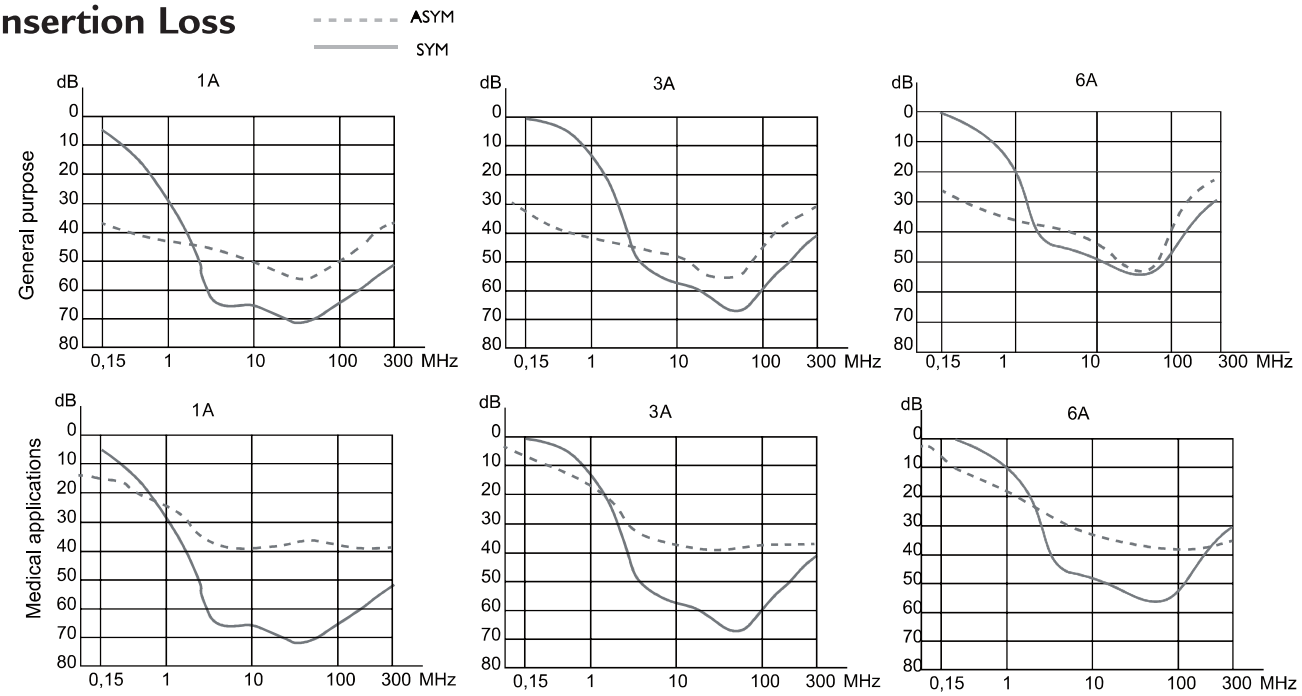

FVDT

Three-Phase Filters for Frequency Converters without Neutral (6-900A)

Electrical schematics

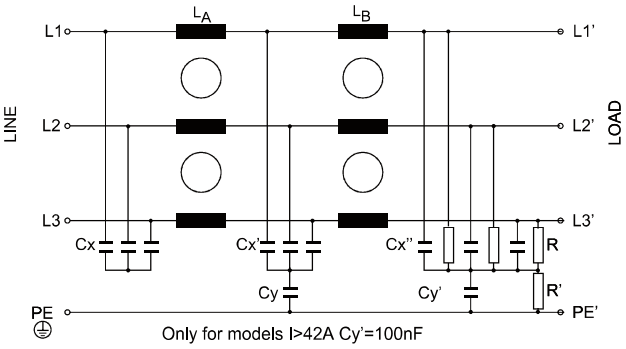

General Specifications

Maximum operating voltage: 520Vac.
Operating frequency: DC - 60Hz.
Hipot test voltage: L/N->PE: 3000Vdc 2s.
Li->Lj: 2250 Vdc 2s.
Application class: HMF Acc. TO DIN 40040 (-25°C/+100°C/95% RH, 30d)
Flammability class: UL 94 V2.

Three phase double stage

Double stage three phase filter.
High performance for frequency inverters.
High current.
High voltage versions are available

Product List

TYPE	I@50°C	L	CX/CX'/CX"	CY/CY'	R/R' (MΩ)	HOUSING	Max. Ifug mA IEC 950	Max. Ifug mA 520V 50Hz	CONNECTION	WEIGHT ±g
FVDT-007B	7 A	4,91 mH	1/1,5/1,5 µF	-/1,5 µF	1/0.68 M	301	88 mA	8,8 mA	4mm2	1200
FVDT-007X						302			4mm2 + AWG18	1200
FVDT-016B	16 A	4,4 mH	2,2/2,2/1,5 µF	-/1,5 µF	1/0.68 M	303	92 mA	8,8 mA	4mm2	1700
FVDT-016X						304			4mm2 + AWG11	1700
FVDT-030B	30 A	1,94 mH	2,2 µF	-/2,2 µF	1/0.68 M	307	150 mA	15 mA	10mm2	1900
FVDT-030X						308			10mm2 + AWG9	1900
FVDT-042B	42 A	1,5 mH	2,2 µF	-/2,2 µF	1/0.68 M	307	158 mA	16 mA	10mm2	2000
FVDT-042X						308			10mm2 + AWG9	2000
FVDT-055B	55A	1,08 mH	2,2 µF	0,1/2,2 µF	1/0.68 M	310	158 mA	16 mA	16mm2	2200
FVDT-055X						311			16mm2 + AWG6	2200
FVDT-075B	75 A	0,85 mH	2,2 µF	0,1/2,2 µF	1/0.68 M	310	158 mA	16 mA	25 mm2	4000
FVDT-100BE	100A	800µH	2,2 µF	0,1/2,2 µF	1/0.68 M	310	153 mA	15,4 mA	50 mm2	5800
FVDT-130BE	130 A	320µH	4,4/4,4/2,2 µF	0,1/2,2 µF	1/0.68 M	310	167 mA	15,9 mA	50 mm2	6600
FVDT-150BE	150A	160µH	4,4/4,4/2,2 µF	0,1/2,2 µF	1/0.68 M	310	167 mA	15,9 mA	50 mm2	7000

FVDT

Three-Phase Filters for Frequency Converters without Neutral (6-900A)

Insertion Loss

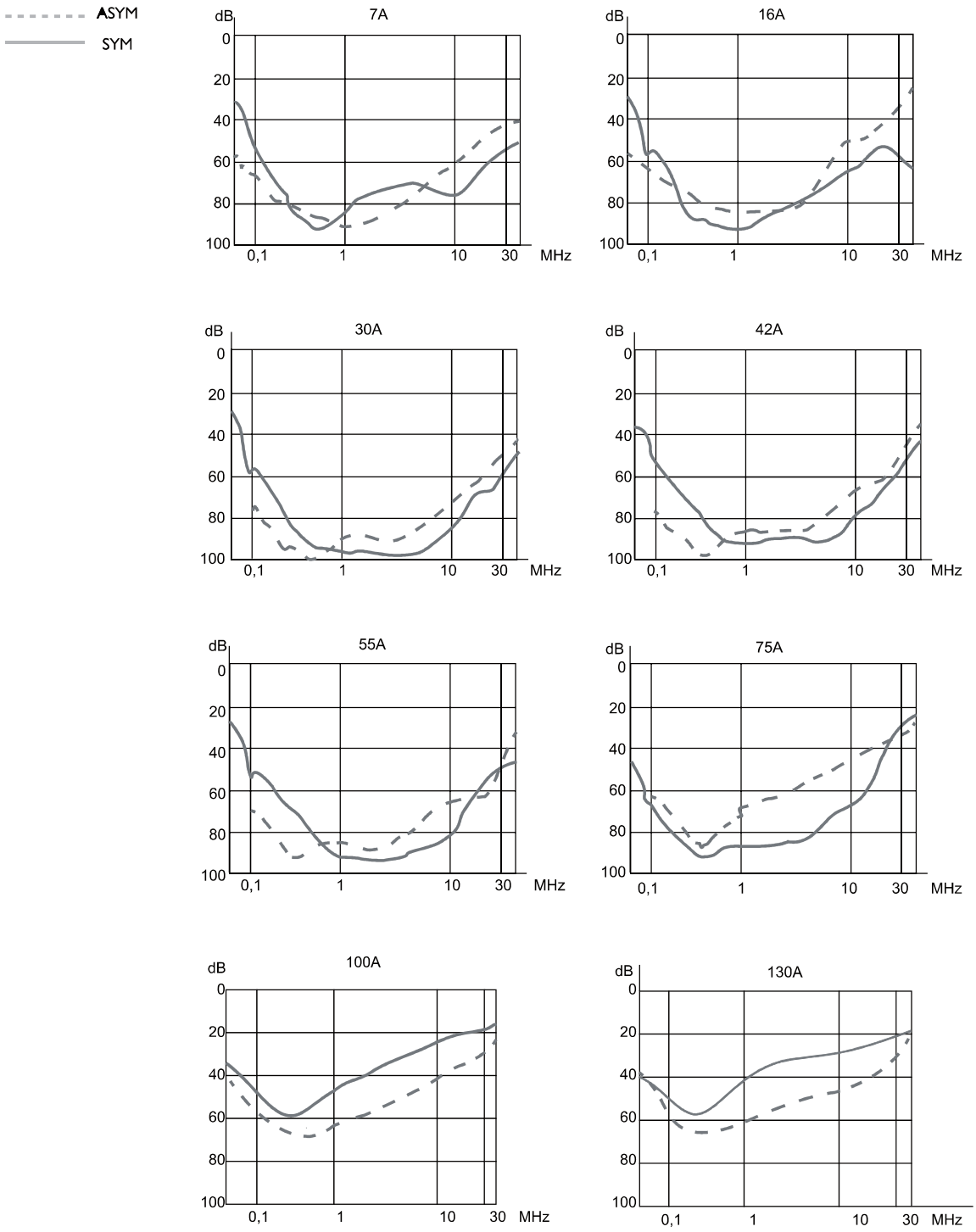

FVDT

Three-Phase Filters for Frequency Converters without Neutral (6-900A)

Electrical schematics

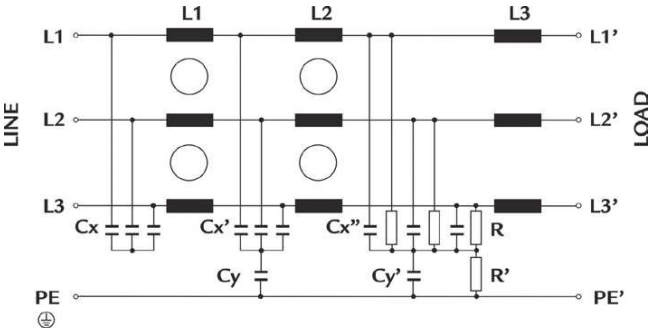

General Specifications

Maximum operating voltage: 520Vac.
Operating frequency: DC - 60Hz.
Hipot test voltage: L/N->PE: 3000Vdc 2s
Li->Lj: 2250 Vdc 2s.
Application class:
HMF Acc. TO DIN 40040
(-25°C/+100°C/95% RH, 30d)
Flammability class: UL 94 V2.

Three phase double stage

Double stage ultra compact three phase filter.
High performance for frequency inverters.

Product List

TYPE	I@ 50°C	L	CX/CX'/CX"	CY/CY'	R/R' (MΩ)	HOUSING	Max. Ifug mA IEC 950	Max. Ifug mA 520V 50Hz	CONNECTION Bus Bar	WEIGHT ±g
FVDT-150WE	150 A	160 µH	4,4/4,4/2,2µF	0,1/2,2 µF	1/0.68 M	313	167 mA	15,9 mA	20X3 Ø8,5 23,5+10	7500
FVDT-180WE	180 A	160 µH	4,4/4,4/2,2µF	0,1/2,2 µF	1/0.68 M	313	167 mA	15,9 mA	20X3 Ø8,5 23,5+10	8300
FVDT-280WE	280 A	160 µH	4,4/4,4/2,2µF	0,1/2,2 µF	1/0.68 M	313	167 mA	15,9 mA	25X5 Ø10,5 18,5+15	9500
FVDT-400W	400 A	150 µH	2,2/4,4/4,4µF	0,1/2,2 µF	1/0.68 M	315	189,7 mA	18,3 mA	30X5 Ø11 25+15	14400
FVDT-660W	660 A	110 µH	2,2/4,4/4,4µF	0,1/2,2 µF	1/0.68 M	315	189,7 mA	18,3 mA	30X10 Ø11 25+15	16800
FVDT-900W	900 A	110 µH	2,2/4,4/4,4µF	0,1/2,2 µF	1/0.68 M	315	189,7 mA	18,3 mA	40X10 Ø14 30+20	20000
FVDT-150BE	150 A	160 µH	4,4/4,4/2,2 µF	0,1 / 2,2 µF	1 / 0,68 M	310	167 mA	15,9 mA	50mm2	7000

Insertion Loss

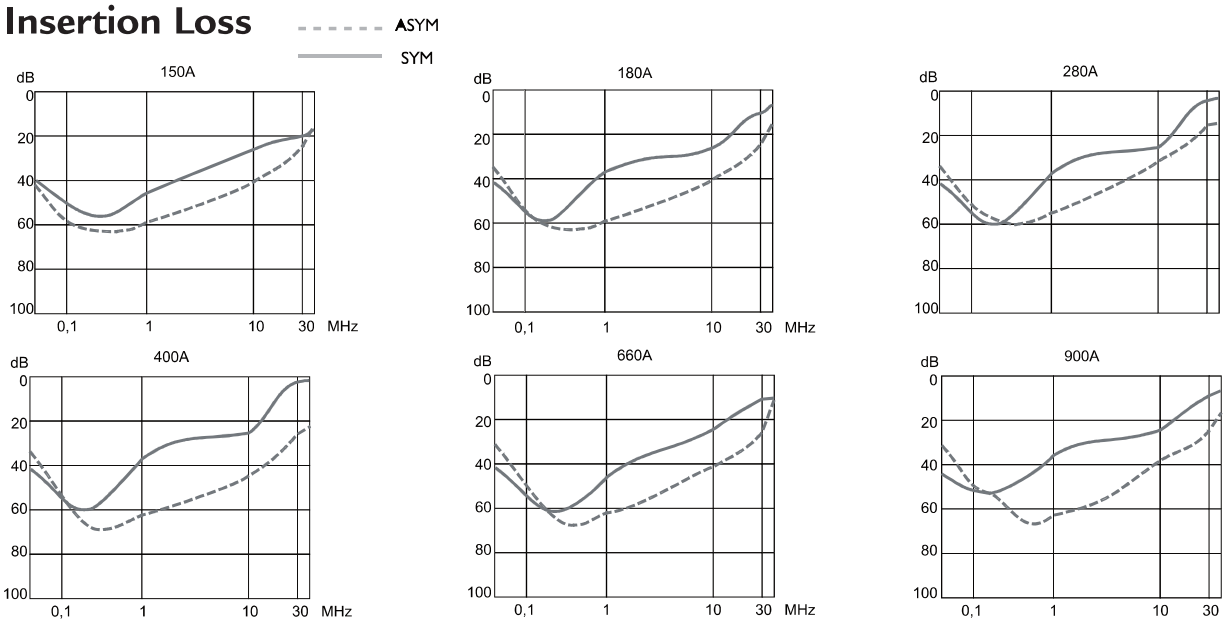

FVSB

Three-Phase Filters One Stage Filter (7-180A)

Electrical schematics

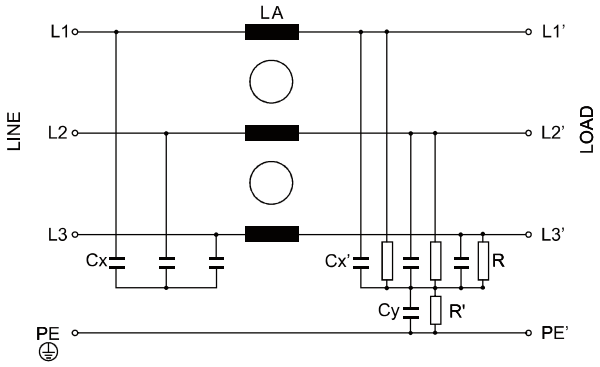

General Specifications

Maximum operating voltage: 520Vac.
Operating frequency: DC - 60Hz.
Hipot test voltage: L/N->PE: 3000Vdc 2s.
Li-Lj: 2250 Vdc 2s.
Application class: HMF Acc. TO DIN 40040
(-25°C/+100°C/95% RH, 30d).
Flammability class: UL 94 V2.

Three phase single stage

For industrial equipments.
Easy to install.
Compact size.

Product List

TYPE	I@ 50°C	L	CX/CX'	CY	R (MΩ)	Max. Ifug mA IEC 950	Max. Ifug mA 520V 50Hz	CONNECTION TRM.Block	WEIGHT ±g
FVSB-007B	7 Amp	3,9 mH	1 µF	470 nF	1MΩ	38 mA	3,7 mA	4mm2	450
FVSB-016B	16 Amp	900 µH	2,2 µF	470 nF	1MΩ	39 mA	3,7 mA	4mm2	650
FVSB-030B	30 Amp	700 µH	4,4/2,2 µF	470 nF	1MΩ	44 mA	4 mA	6mm2	1000
FVSB-042B	42 Amp	500 µH	4,4/2,2 µF	470 nF	1MΩ	44 mA	4 mA	10mm2	1100
FVSB-055B	55 Amp	360 µH	4,4/2,2 µF	470 nF	1MΩ	44 mA	4 mA	16mm2	1250
FVSB-075B	75 Amp	150 µH	4,4/2,2 µF	470 nF	1MΩ	44 mA	4 mA	25mm2	2000
FVSB-100B	100 Amp	170 µH	4,4/2,2 µF	470 nF	1MΩ	44 mA	4 mA	50mm2	3100
FVSB-130B	130 Amp	75 µH	4,4/2,2 µF	470 nF	1MΩ	44 mA	4 mA	50mm2	3200
FVSB-180B	180 Amp	75 µH	4,4/2,2 µF	470 nF	1MΩ	44 mA	4 mA	90mm2	4550

FVSB

Three-Phase Filters One Stage Filter (7-180A)

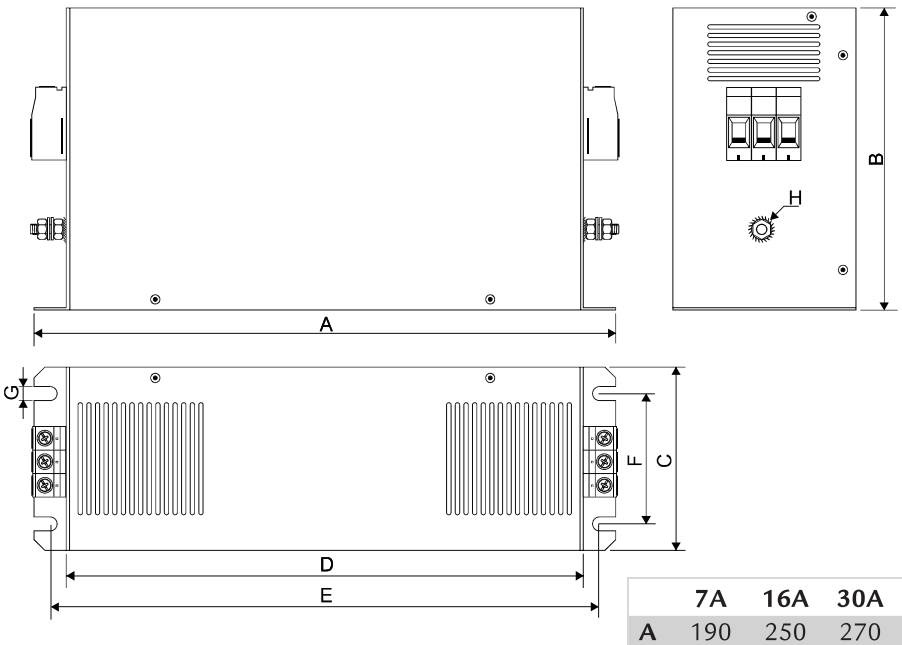

	7A	16A	30A	42A	55A	75A	100A	130A	180A
A	190	250	270	310	310	270	270	270	380
B	70	70	85	85	90	140	150	150	170
C	40	45	60	60	60	85	90	90	120
D	160	220	240	280	280	240	240	240	350
E	180	235	255	295	295	255	255	255	365
F	20	25	30	30	30	60	65	65	102
G	4,5	5,4	5,4	5,4	5,4	6,5	6,5	6,5	6,5
H	M5	M5	M5	M6	M6	M6	M10	M10	M10

Insertion Loss

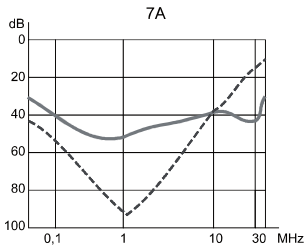

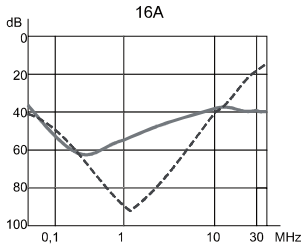

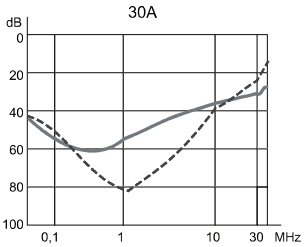

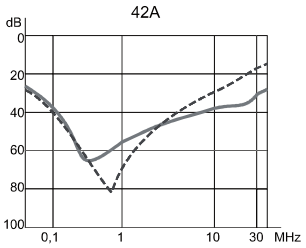

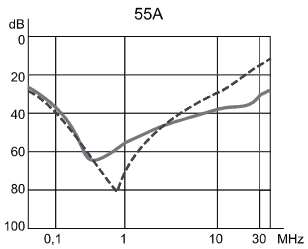

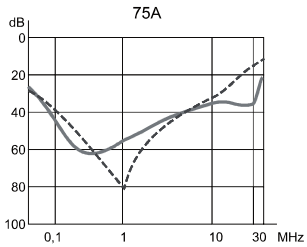

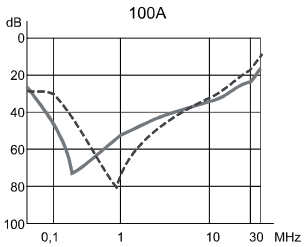

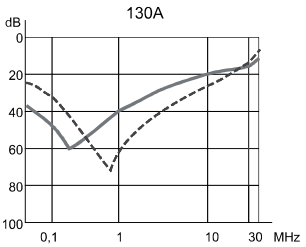

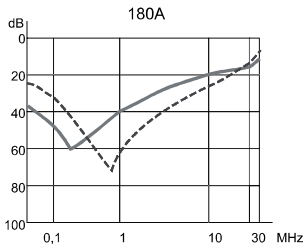

FVDT-D

Three-Phase Filters For Frequency Converters without Neutral (6-28A)

Electrical schematics

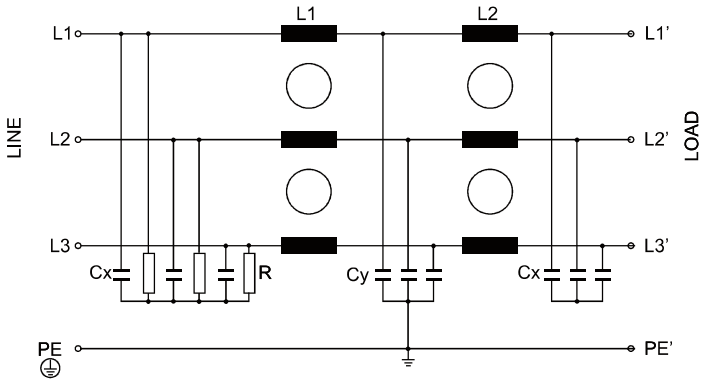

General Specifications

Maximum operating voltage: 520Vac.
Operating frequency: DC - 60Hz.
Hipot test voltage: L/N->PE: 3000Vdc 2s
Li->Lj: 2250 Vdc 2s.
Application class:
HMF Acc. TO DIN 40040
(-25°C/+100°C/95% RH, 30d)
Flammability class: UL 94 V2.

Three phase double stage

Double stage three phase filter.
Low leakage current.

Product List

TYPE	I@ 50°C	L	CX	CY	R/R'	HOUSING	Max. Ifug mA IEC 950	Max. Ifug mA 400V 50Hz	CONNECTION	WEIGHT ±g
FVDT-005DB	5 Amp	10 mH	1 µF	15 nF	1 MΩ	305	3,2 mA	0,28 mA	4mm2	700
FVDT-005DX						306			4mm2 + AWG18 WIRE	700
FVDT-008DB	8 Amp	5,8 mH	1 µF	15 nF	1 MΩ	305	3,2 mA	0,28 mA	4mm2	700
FVDT-008DX						306			4mm2 + AWG18 WIRE	700
FVDT-016DB	16 Amp	3,7 mH	1 µF	15 nF	1 MΩ	303	3,2 mA	0,28 mA	4mm2	1000
FVDT-016DX						304			4mm2 + AWG11 WIRE	1000
FVDT-028DB	28 Amp	2,9 mH	1 µF	15 nF	1 MΩ	303	3,2 mA	0,28 mA	6mm2	1900
FVDT-028DX						304			6mm2 + AWG9 WIRE	1900

Insertion Loss

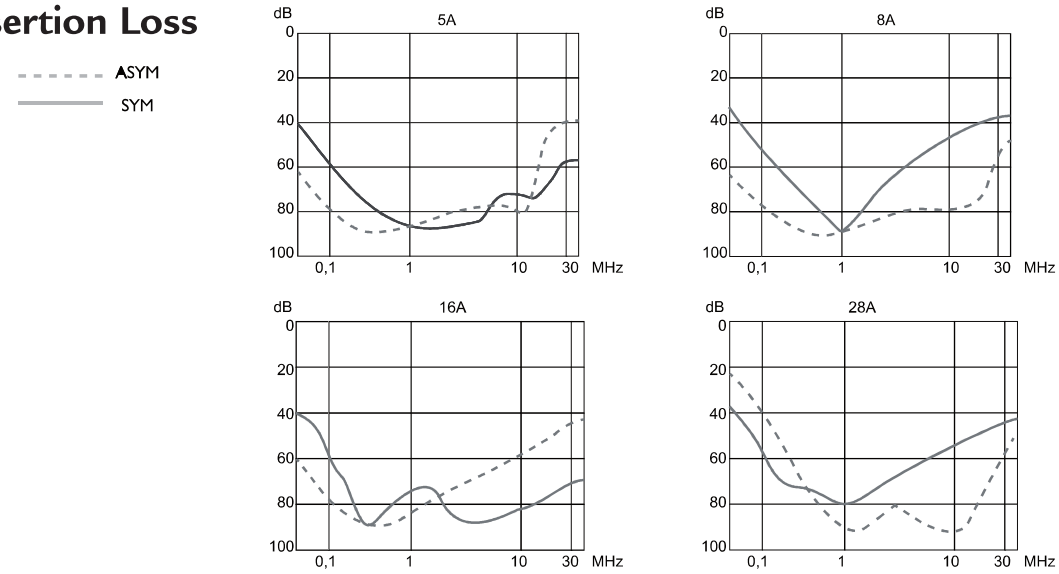

FVST

Three-Phase Filters For Frequency Converters without Neutral (6-660A)

Electrical schematics

Only for 6/8/16 Amp

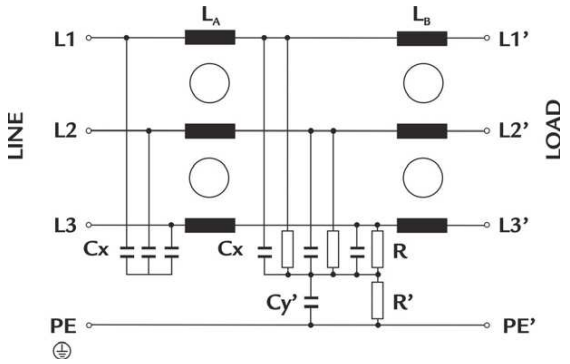

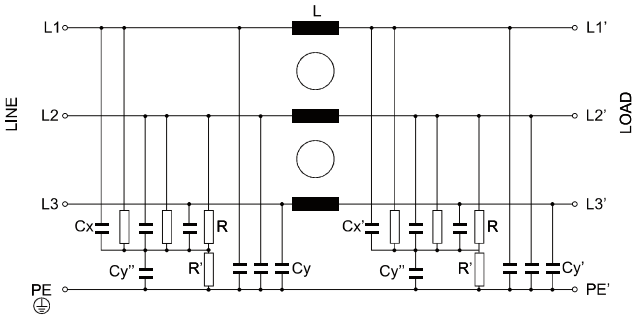

General Specifications

Maximum operating voltage: 520Vac.
Operating frequency: DC - 60Hz.
Hipot test voltage: L/N->PE: 3000Vdc 2s.
Li-Lj: 2250 Vdc 2s.
Application class: HMF Acc. TO DIN 40040 (-25°C/+100°C/95% RH, 30d).
Flammability class: UL 94 V2.

Three phase one stage

Single stage three phase filter.
For fast switching applications.
High current.
Some high voltaje version are available.

Product List

TYPE	I@ 50°C	L	CX/CX'	CY/CY'	R/R' (MΩ)	HOUSING	Max. Ifug mA IEC 950	Max. Ifug mA 400V 50Hz	CONNECTION Hx0 Ø M+N	WEIGHT ±g
FVST-006	6 Amp	7 mH	1/- µF	/-/470/- nF	470/10MΩ	301	38 mA	3,7 mA	4mm2	700
FVST-008	8 Amp	5,5 mH	1/- µF	/-/470/- nF	470/10MΩ	303	39 mA	3,7 mA	4mm2	1600
FVST-016	16 Amp	4 mH	2,2/- µF	/-/470/- nF	1M/10MΩ	303	44 mA	4 mA	4mm2	1600
FVST-025	25 Amp	2,9 mH	4,4µF	10nF/47nF/1µF	1MΩ	309	190 mA	17,6 mA	6mm2	2400
FVST-036	36 Amp	2,2 mH	4,4µF	10nF/47nF/1µF	1MΩ	309	190 mA	17,6 mA	10mm2	2400
FVST-050	50 Amp	1 mH	4,4µF	10nF/100nF/1µF	1MΩ	309	190 mA	17,6 mA	10mm2	2400
FVST-064	64 Amp	0,55 mH	4,4µF	10nF/100nF/1µF	1MΩ	309	190 mA	17,6 mA	25mm2	2400
FVST-080	80 Amp	1 mH	6,6µF	47nF/100nF/1µF	1MΩ	310	226 mA	18,7 mA	25mm2	4500
FVST-110	110 Amp	0,7 mH	6,6µF	47nF/100nF/1µF	1MΩ	310	226 mA	18,7 mA	50mm2	4500
FVST-180	180 Amp	0,4 mH	6,6µF	47nF/100nF/1µF	1MΩ	312	226 mA	18,7 mA	M10 SCREW	-
FVST-250	250 Amp	0,13 mH	11µF	100nF/100nF/1µF	1MW/470KΩ	315	255 mA	19,4 mA	25X5 Ø11 25+15*	-
FVST-350	350 Amp	0,13 mH	11/22 µF	100nF/100nF/1µF	1MW/470KΩ	315	262 mA	19,6 mA	25X5 Ø11 25+15*	-
FVST-450	450 Amp	0,15 mH	11/22 µF	100nF/100nF/1µF	1MW/220KΩ	315	262 mA	19,6 mA	30X5 Ø11 25+15*	-
FVST-660	660 Amp	0,14 mH	11/22 µF	100nF/100nF/1µF	1MW/470KΩ	315	262 mA	19,6 mA	30X10 Ø11 25+15*	-

Insertion Loss

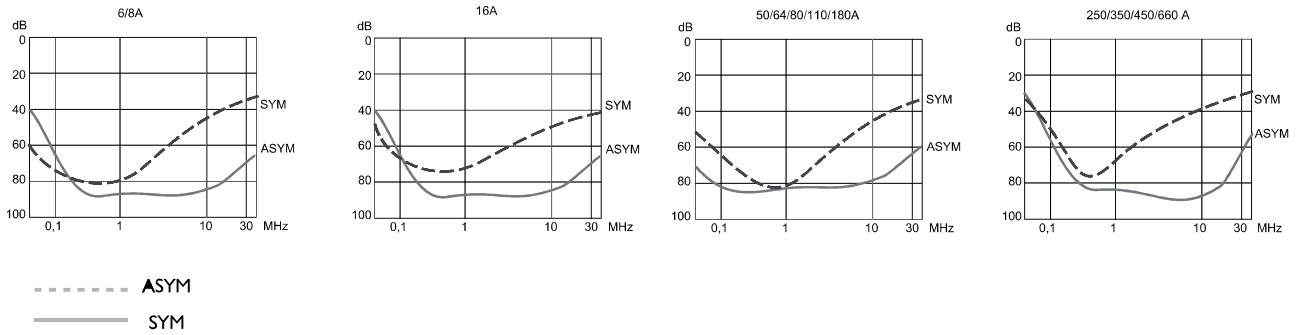

HCWMGF

Three-Phase Filters For Wind Mills Applications (150-2500A)

General Specifications

- Maximum operating voltage: 720 Vac
- Operating frequency: DC – 60Hz
- Hipot test voltage:
  L/N-›·PE: 3100 Vdc 2s
  Li-Lj: 3000 Vdc 2s
- Flammability class: UL 94 V2

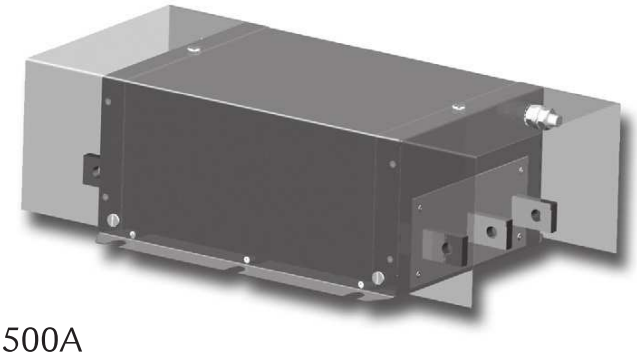

Three Phase Filters

High-Power filters for rated currents up to 2500A
Attenuation loss for Class A compliance.
Protective cover for busbar optional
High voltage for IT networks
HCWMGFR-XXXXHV-LL Low Leakage Current version

Applications

High power inverters, converters,
UPS and renewable
energy equipments

Electrical schematic

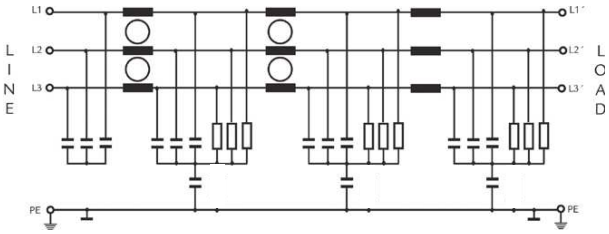

Product List

TYPE	Rated Current (A) @ 50 °c	Power (kW)	Leakage Current (mA)	Power Losses (W)	Connections Input/Output	Busbar Connections (mm)	Weight (Kg)	Housing
HCWMGF-150HV	150	110	<6	24	M10 Screw		6,5	65
HCWMGF-180HV	180	132	<6	34	M10 Screw		6,5	65
HCWMGF-250HV	250	200	<6	49	M10 Screw		7	66
HCWMGF-320HV	320	250	<6	19	25 x 6mm, Φ 10.5	6 x 25	10,5	67
HCWMGF-400HV	400	315	<6	29	25 x 6mm, Φ 10.5	6 x 25	10,5	67
HCWMGF-600HV	600	500	<6	44	25 x 8mm, Φ 10.5	8 x 25	11	68
HCWMGF-800HV	800	630	<6	39	40 x 8mm, Φ 14	8 x 40	18	69
HCWMGF-1000HV	1000	710	<6	60	40 x 8mm, Φ 14	8 x 40	18	69
HCWMGF-1300HV	1300	1000	<6	100	60 x 10mm, Φ 14	10 x 60	27	70
HCWMGF-1600HV	1600	1320	<6	131	60 x 10mm, Φ 14	10 x 60	27	70
HCWMGF-2500HV	2500	2000	<6	300	70 x 15mm, Φ 14	15 x 70	55	71

HCWMGF

Three-Phase Filters For Wind Mills Applications (150-2500A)

Insertion Loss ——— ASYM
— — — SYM

150-180A

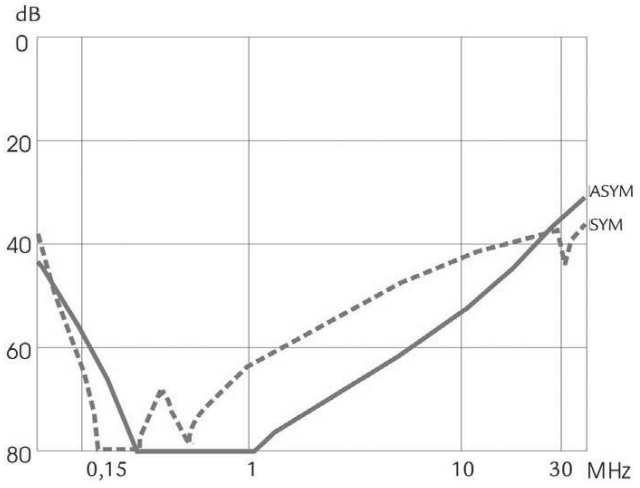

250-600A

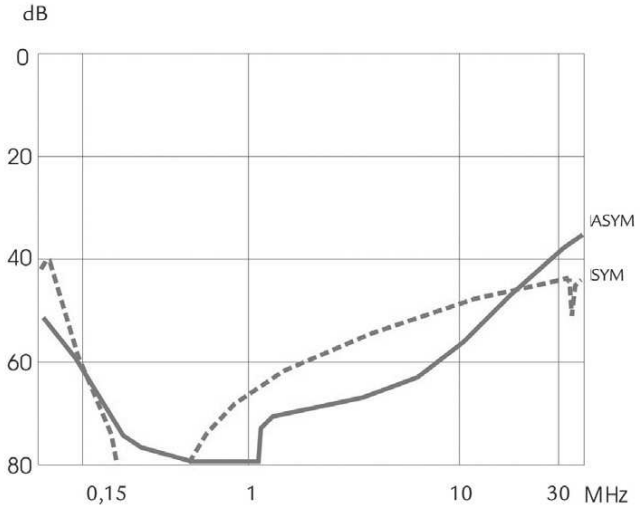

800-1000-1300A

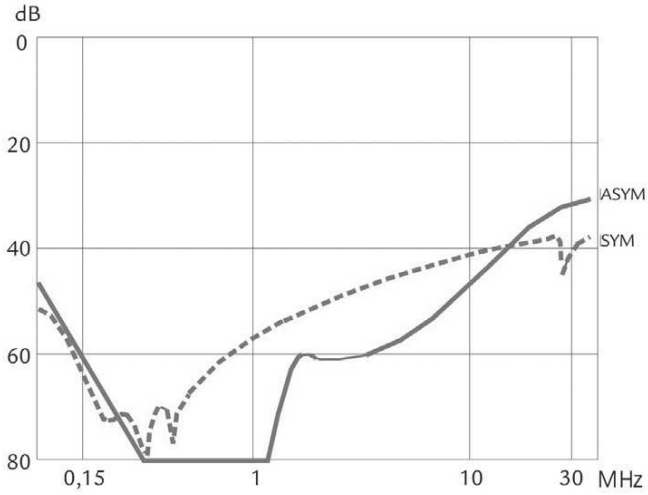

1600-2500A

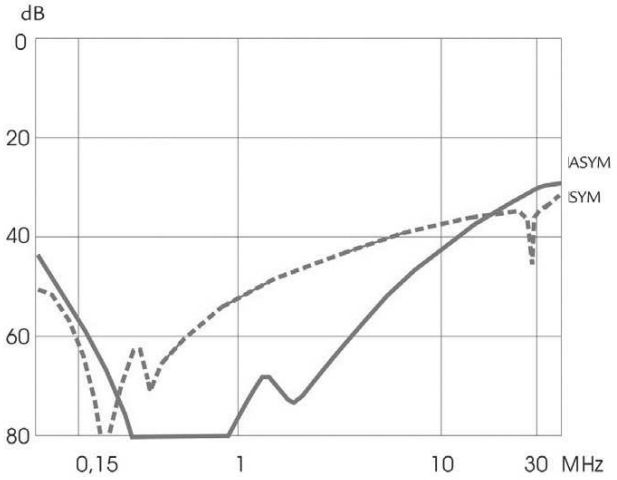

DTRF

Three Phase Filter for Industrial Applications (20-50A)

General Specifications

Maximum operating voltage: 520Vac
Operating frequency: DC – 60Hz
Hipot test voltage:
L/N-›PE: 2000 Vac 2s
Li-Lj: 2250 Vdc 2s
Application class: HMF Acc. TO DIN 40040 (-25°C/+100°C/95% RH, 30d)
Flammability class: UL 94 V2

Applications

Servo drives
Three phase power supplies
Medical equipment

Features

DIN guide optional for rail mounted equipment
(DIN ended reference)
LL models for very low leakage current
NL models for better attenuation.

Electrical schematics

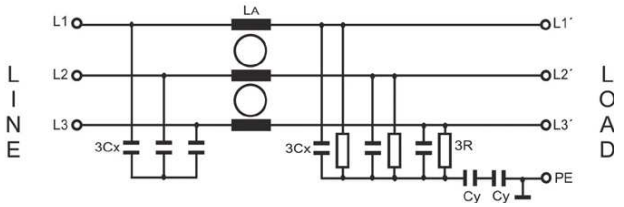

Product List

TYPE	Rated Current (A) @ 50 °c	Leakage Current (mA)	Power Losses (W)	Connections	Weight (Kg)	Housing
DTRF-020LL	20	<0,4	5,4	Terminal block 4-6 mm2 / AWG 12-10	0,56	61,63 DIN
DTRF-030LL	30	<0,4	6,2	Terminal block 8-10 mm2 / AWG 8-7	0,58	61,63 DIN
DTRF-050LL	50	<0,4	9,4	Terminal block 16-20 mm2 / AWG 5-4	0,98	62,64 DIN
DTRF-020NL	20	<2,5	5,4	Terminal block 4-6 mm2 / AWG 12-10	0,56	61,63 DIN
DTRF-030NL	30	<2,5	6,2	Terminal block 8-10 mm2 / AWG 8-7	0,58	61,63 DIN
DTRF-050NL	50	<2,5	9,4	Terminal block 16-20 mm2 / AWG 5-4	0,98	62,64 DIN

DTRF

Three Phase Filter for Industrial Applications (20-50A)

Insertion Loss ——— ASYM
— — — SYM

20A LL

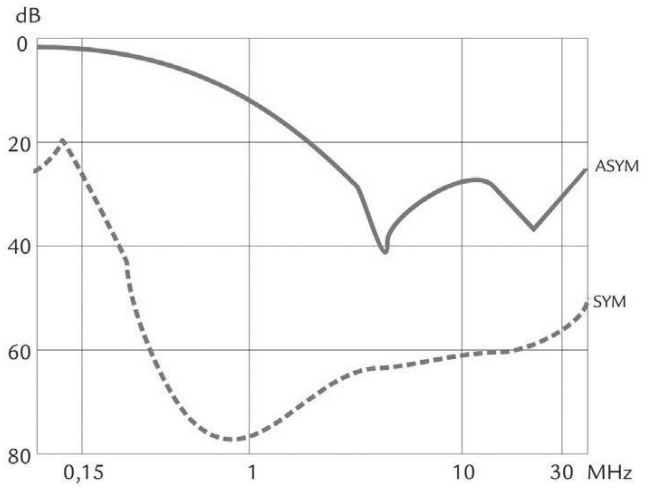

20A NL

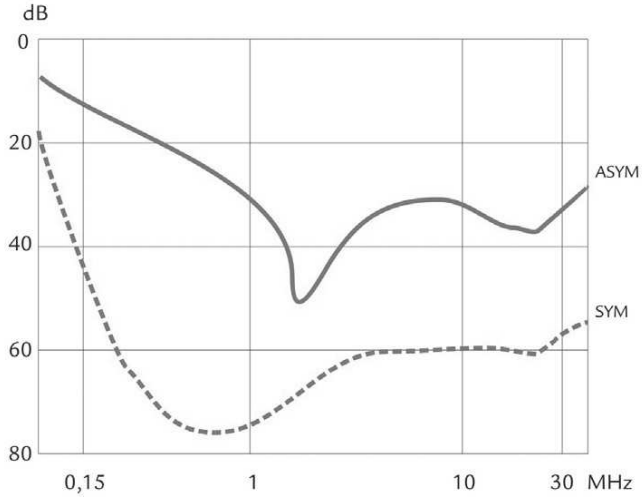

30/50A LL

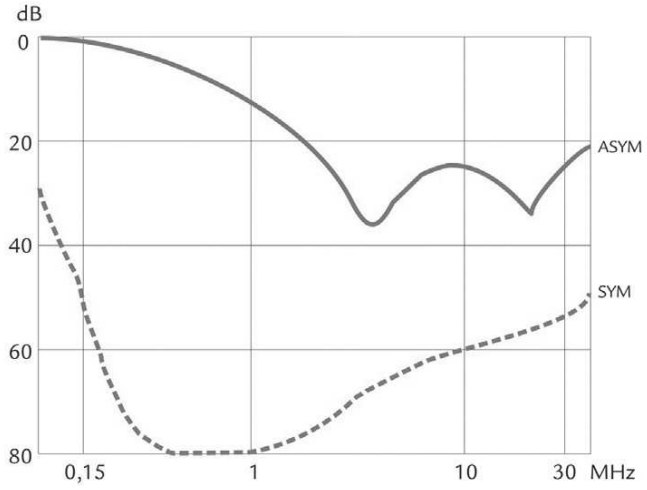

30/50A NL

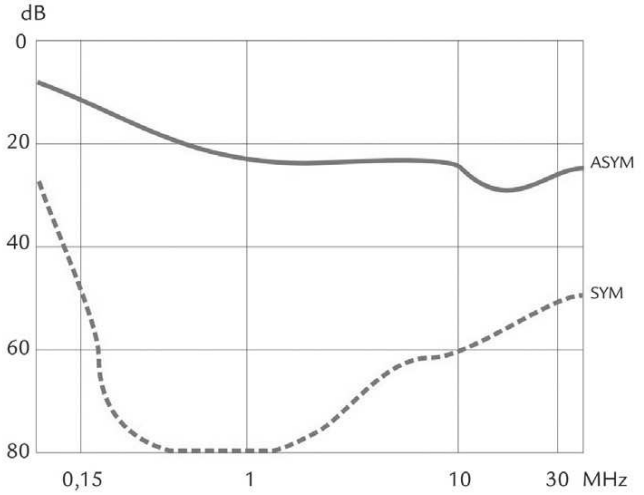

FVTC

Three Phase One Stage Filter for Industrial Applications (10-1000A)

General Specifications

Maximum operating voltage: 520 Vac
Operating frequency: DC – 60Hz
Hipot test voltage:
L/N-›PE: 3000 Vdc 2s
Li-Lj: 2250 Vdc 2s
Application class: HMF Acc. TO DIN 40040 (-25°C/+100°C/95% RH, 30d)
Flammability class: UL 94 V2

Three Phase One stage

For industrial motor drive applications
Protective covers as optional accessory
Compact size

Electrical schematic

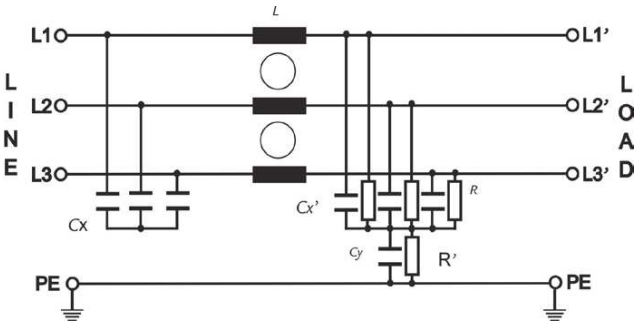

Product List

TYPE	Rated Current (A) @ 50 °c	Typical drive Power rating (KW)	Leakage Current 400VAC/50Hz (mA)	Power Losses (W)	Connections	Weight (Kg)
FVTC-010B	10	5.5	26.4	2.4	Terminal block 6 mm2 / AWG 8	0.5
FVTC-020B	20	11	26.4	4.1	Terminal block 10 mm2 / AWG 6	0.6
FVTC-035B	35	22	29.4	6.8	Terminal block 16 mm2 / AWG 4	0.8
FVTC-050B	50	30	29.4	12.8	Terminal block 25 mm2 / AWG 2	1.3
FVTC-065B	65	37	29.4	13.5	Terminal block 25 mm2 / AWG 2	1.5
FVTC-080B	80	45	29.4	13.5	Terminal block 50mm2 / AWG 0	2.5
FVTC-100B	100	55	29.4	17.1	Terminal block 95 mm2 / AWG 000	3
FVTC-150P	150	75	59.5	7.5	Bus Bar 20x3,ø9	7
FVTC-200P	200	110	59.5	13.2	Bus Bar 20x3,ø9	7
FVTC-250P	250	132	59.5	20.6	Bus Bar 20x3,ø9	7
FVTC-320P	320	160	59.5	12.2	Bus Bar 25x6,ø11	7.5
FVTC-400P	400	220	59.5	19.2	Bus Bar 25x6,ø11	7.5
FVTC-600P	600	315	59.5	35.6	Bus Bar 25x6,ø11	8
FVTC-800P	800	400	59.5	51.8	Bus Bar 40x8,ø13.5	18
FVTC-1000P	1000	560	59.5	81	Bus Bar 40x8,ø13.5	18

FVTC

Three Phase One Stage Filter for Industrial Applications (10-1000A)

Mechanical dimensions (mm)

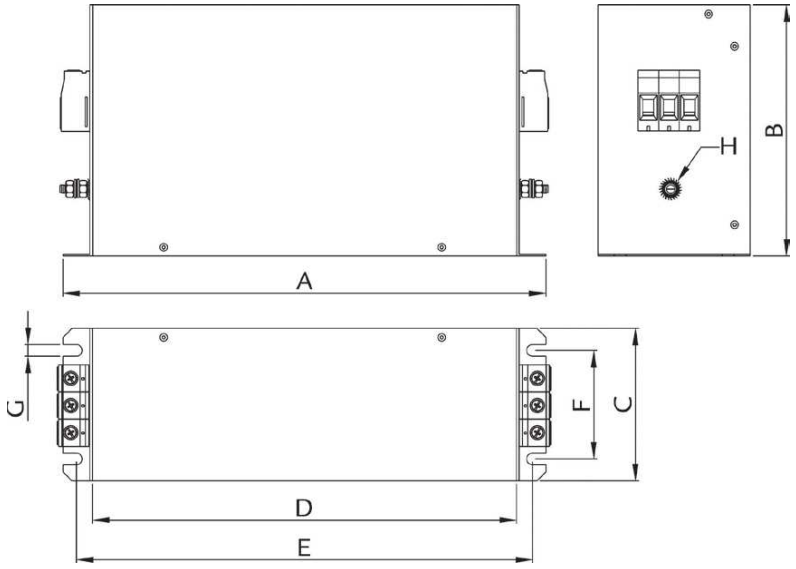

	10 A	20 A	35 A	50 A	65 A	80 A	100 A	150 A	200 A	250 A	320 A	400 A	600 A	800 A	1000 A
A	150	150	160	170	170	200	230	300	300	300	300	300	300	370	370
B	58	58	68	80	80	90	90	86	86	86	95	95	95	125	125
C	58	58	70	85	85	95	95	200	200	200	200	200	200	190	190
D	120	120	130	140	140	170	200	240	240	240	240	240	240	310	310
E	132.5	132.5	142.5	152.5	152.5	182.5	212.5	275	275	275	275	275	275	345	345
F	42	42	50	65	65	75	75	165	165	165	165	165	165	155	155
G	4.5	4.5	5.5	5.5	5.5	5.5	5.5	Ø11	Ø11	Ø11	Ø11	Ø11	Ø11	Ø11	Ø11
H	M4	M4	M6	M6	M6	M8	M8	M10	M10	M10	M10	M10	M10	M12	M12
V								20	20	20	25	25	25	40	40
W								3	3	3	6	6	8	8	8
X								10	10	10	12,5	12,5	12,5	20	20
Y								37	37	37	37	37	37	47	47
Z								Ø9	Ø9	Ø9	Ø11	Ø11	Ø11	Ø13.5	Ø13.5

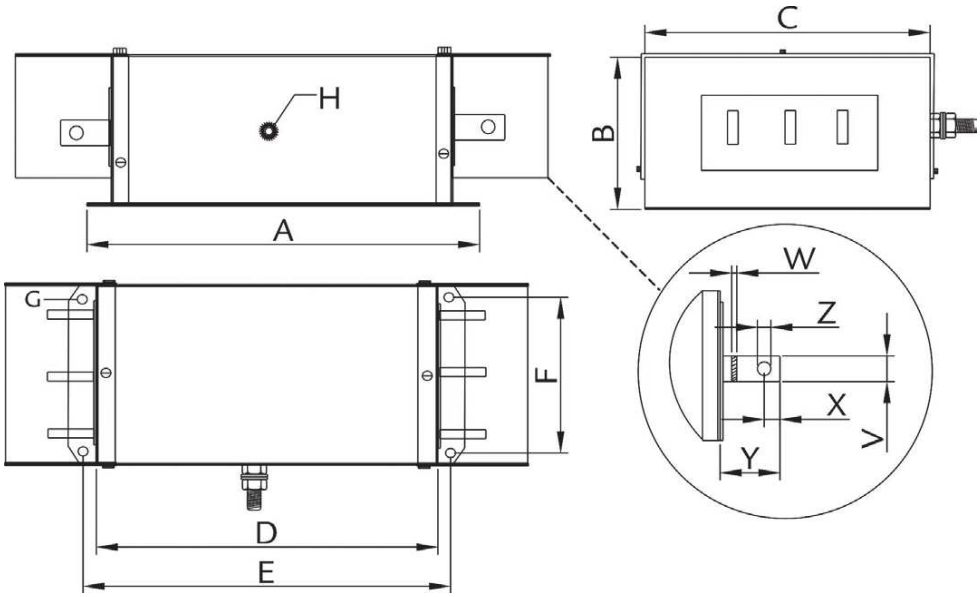

FVTC

Three Phase One Stage Filter for Industrial Applications (10-1000A)

Insertion Loss ——— ASYM
— — — SYM

10 & 20A

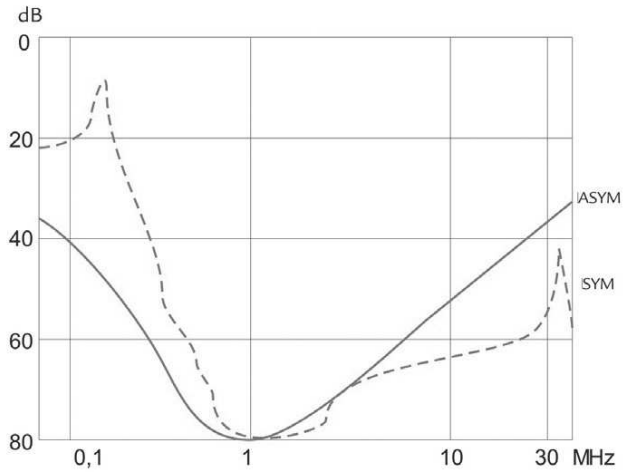

35 ~ 65A

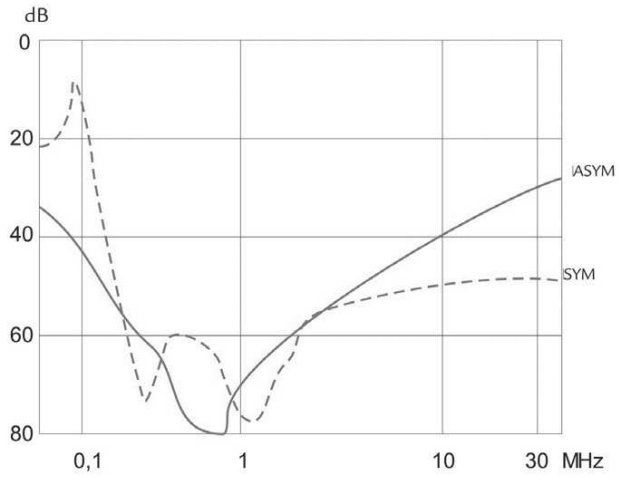

80 & 100A

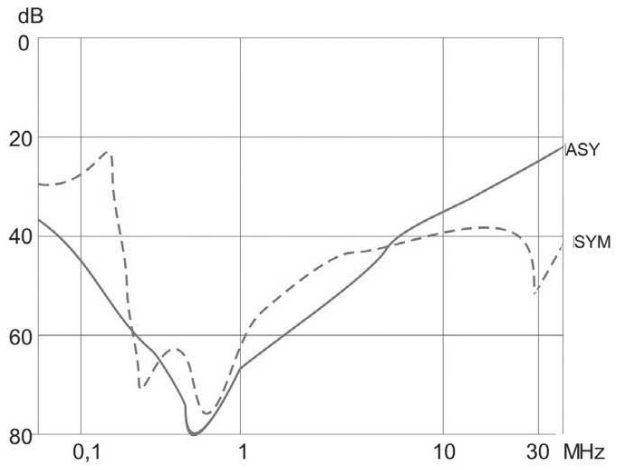

150 ~ 1000A

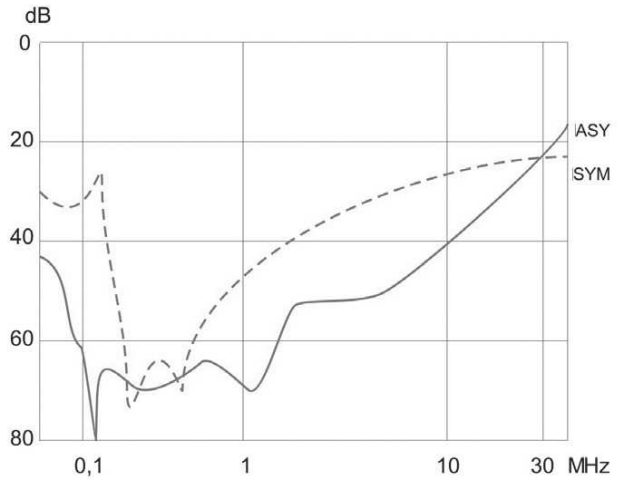

FVRB

Three Phase One Stage Filter for Regenerative Converters (35-300A)

General Specifications

Maximum operating voltage: 520 Vac
Operating frequency: DC – 60Hz
Hipot test voltage:
L/N-›PE: 3000 Vdc 2s
Li-Lj: 2250 Vdc 2s
Application class: HMF Acc. TO DIN 40040 (-25°C/+100°C/95% RH, 30d)
Flammability class: UL 94 V2

Three Phase One stage

For Regeneration units
Good saturation resistance
Book style with compact size and easy to install.

Electrical schematic

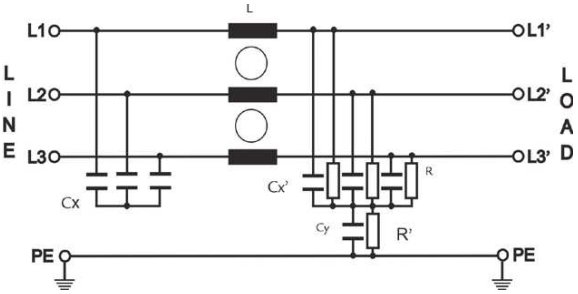

Product List

TYPE	Rated Current (A) @ 50 °c	Typical drive Power rating (KW)	Leakage Current 400VAC/50Hz (mA)	Power Losses (W)	Connections	Weight (Kg)
FVRB-035B	35	22	48.9	11.8	Terminal block 10 mm2 / AWG 6	2.5
FVRB-050B	50	30	66.1	18	Terminal block 16 mm2 / AWG 4	3.5
FVRB-080B	80	45	71.5	25.9	Terminal block 25 mm2 / AWG 2	5.5
FVRB-110B	110	55	71.5	32.7	Terminal block 50 mm2 / AWG 0	6
FVRB-150B	150	75	71.5	50.6	Terminal block 95 mm2 / AWG 000	9
FVRB-200B	200	110	71.5	67.2	Terminal block 95 mm2 / AWG 000	9.5
FVRB-230B	230	132	71.5	36.5	Terminal block 95 mm2 / AWG 000	10
FVRB-300P	300	160	71.5	54.0	Bus Bar 150 mm2 / AWG0000	12

FVRB

Three Phase One Stage Filter for Regenerative Converters (35-300A)

Mechanical dimensions (mm)

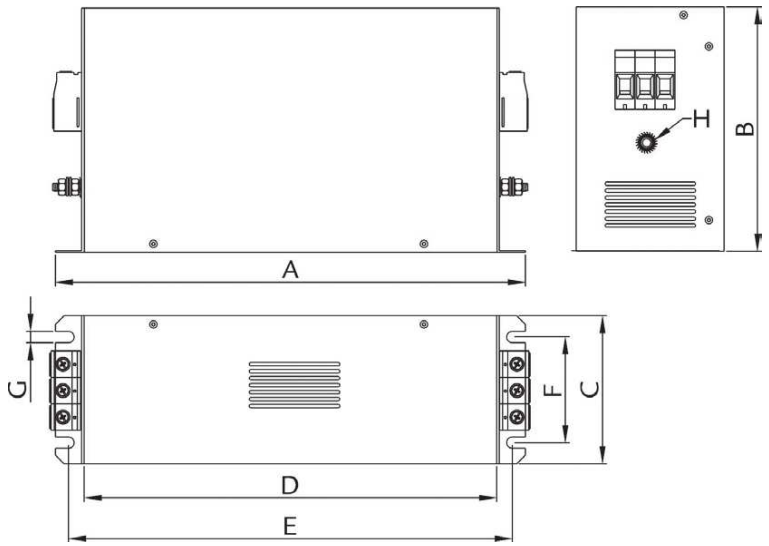

	35 A	50 A	80 A	110 A	150 A	200 A	230 A	300 A
A	335	329	379	379	438	438	438	440
B	150	185	220	220	240	240	240	200
C	60	80	90	90	110	110	110	200
D	305	300	350	350	400	400	400	400
E	320	314	364	364	413	413	413	420
F	35	55	65	65	80	80	80	160
G	6.5	6.5	6.5	6.5	6.5	6.5	6.5	6.5
H	M5	M6	M10	M10	M10	M10	M10	M12
								BUS BAR
								25x5 mm

FVRB

Three Phase One Stage Filter for Regenerative Converters (35-300A)

Insertion Loss ——— ASYM
— — — SYM

35~80A

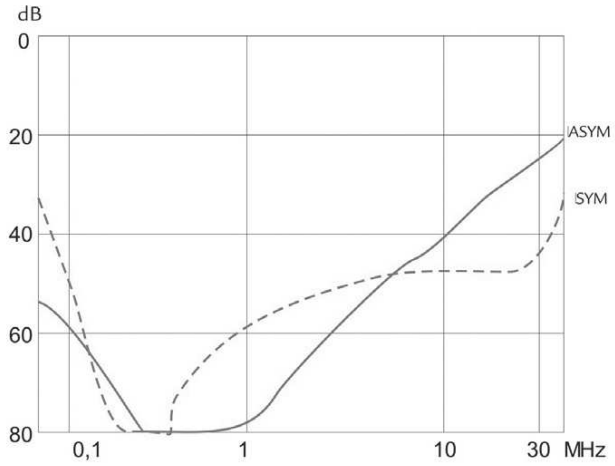

110&150A

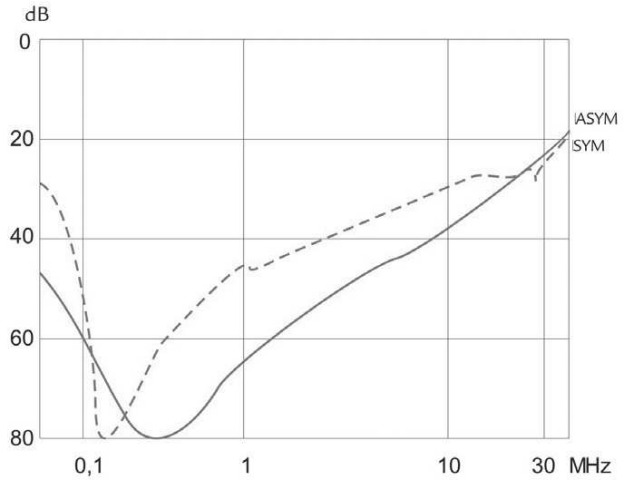

200A

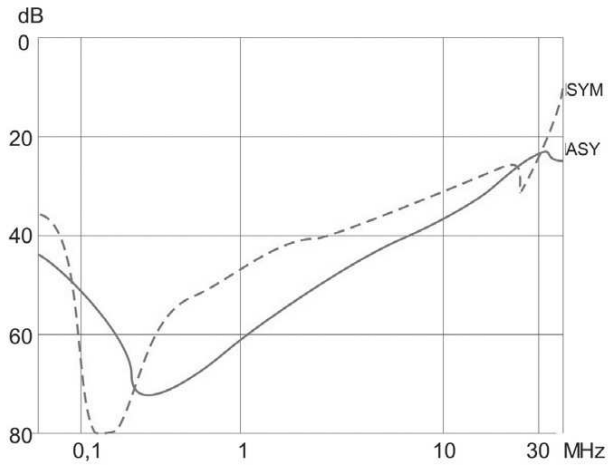

230 & 300 A

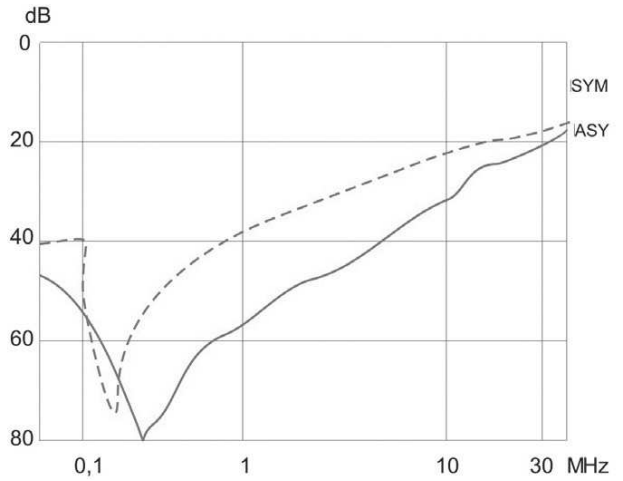

FVDB

Three Phase Double Stage Filter for Industrial Applications (7-250A)

General Specifications

Maximum operating voltage: 520 / 720 Vac
Operating frequency: DC – 60Hz
Hipot test voltage:
L/N-›PE: 3000 Vdc 2s
Li-Lj: 2250 Vdc 2s
Application class: HMF Acc. TO DIN 40040 (-25°C/+100°C/95% RH, 30d)
Flammability class: UL 94 V2

Three Phase One stage

For three phase inverters and power drive system
Book style with compact size and easy to install.
High Voltage version is available

Electrical schematic

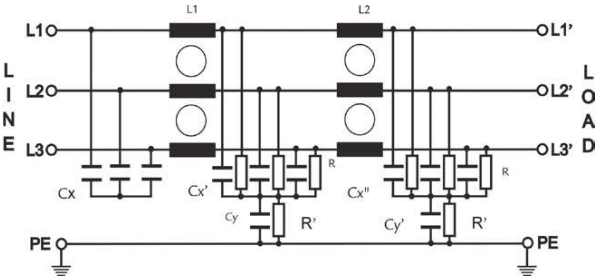

Product List

TYPE	Rated Current (A) @ 50 °c	Typical drive Power rating Nor./HV(KW)	Leakage Current 440VAC/50Hz (mA)	Power Losses (W)	Connections	Weight (Kg)
FVDB-007B FVDB-007BHV	7	4 / 5.5	16.5	9	Terminal block 4 mm2 / AWG 10	1
FVDB-016B FVDB-016BHV	16	7.5 / 11	18.3	20	Terminal block 4 mm2 / AWG 10	1.5
FVDB-030B FVDB-030BHV	30	15 / 22	24.2	21	Terminal block 10 mm2 / AWG 6	2
FVDB-042B FVDB-042BHV	42	22 / 30	25.8	30	Terminal block 16 mm2 / AWG 4	2.5
FVDB-055B FVDB-055BHV	55	30 / 45	25.8	30	Terminal block 25 mm2 / AWG 2	3
FVDB-075B FVDB-075BHV	75	37 / 55	25.8	24	Terminal block 25mm2 / AWG 2	4
FVDB-100B FVDB-100BHV	100	55 / 90	25.8	51	Terminal block 50 mm2 / AWG 0	5.5
FVDB-130B FVDB-130BHV	130	75 / 100	30	50	Terminal block 95 mm2 / AWG 000	7
FVDB-180B	180	90	30	73	Terminal block 95 mm2 / AWG 000	11
FVDB-250B	250	132	30	79	Terminal block 95 mm2 / AWG 000	12

FVDB

Three Phase Double Stage Filter for Industrial Applications (7-250A)

Mechanical dimensions (mm)

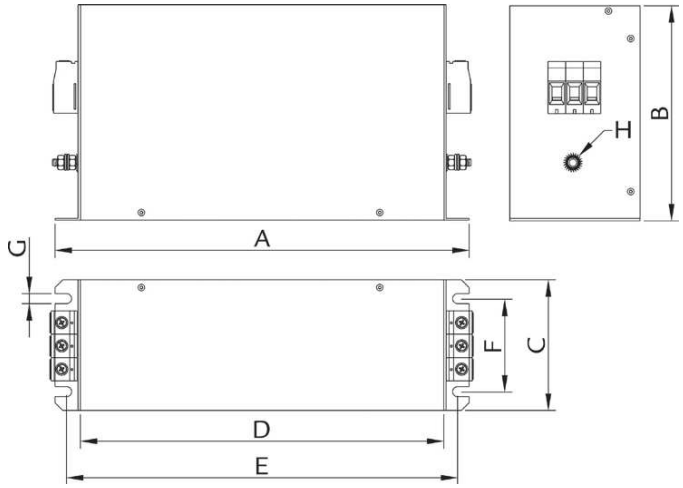

Mechanical Dimensions (mm)

	7A	16 A	30 A	42 A	55 A	75 A	100 A	130 A	180 A	250 A
A	255	305	335	329	329	329	379	439	438	478
B	126	142	150	185	185	220	220	240	240	240
C	50	55	60	70	80	80	90	110	110	110
D	225	275	305	300	300	300	350	400	400	440
E	240	290	320	314	314	314	364	414	413	453
F	25	30	35	45	55	55	65	80	80	80
G	6.5	6.5	6.5	6.5	6.5	6.5	6.5	6.5	6.5	6.5
H	M5	M5	M6	M6	M6	M6	M10	M10	M10	M10

Insertion Loss ——— ASYM
— — — SYM

7~30A

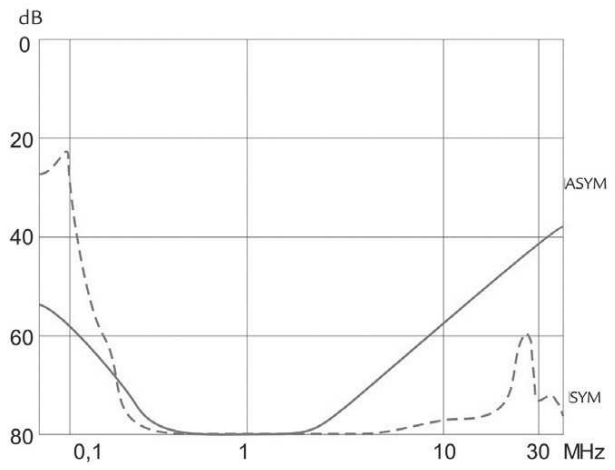

42~100A

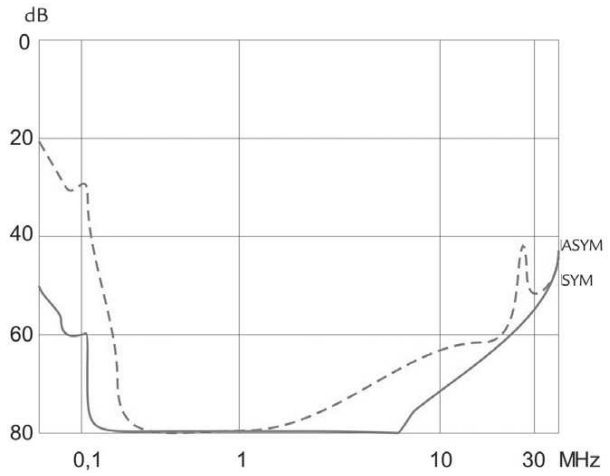

FVDB

Three Phase Double Stage Filter for Industrial Applications (7-250A)

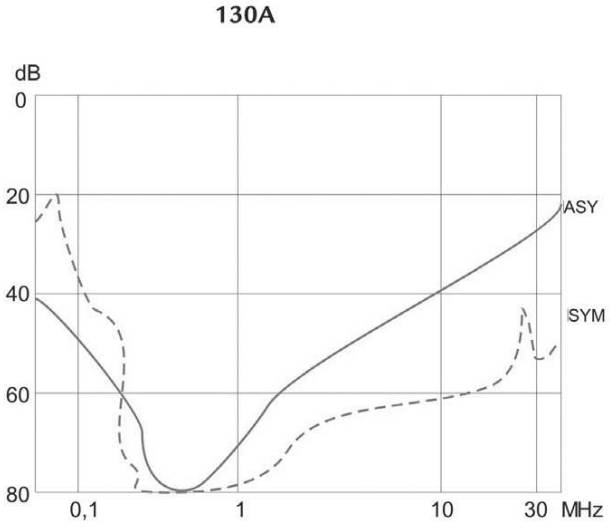

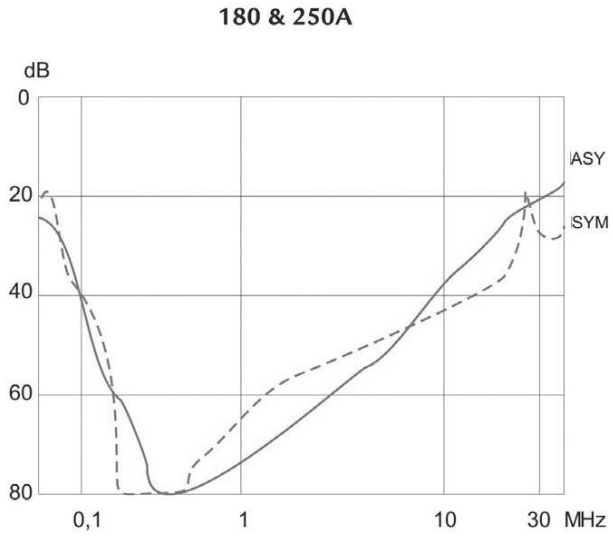

FOR FREQUENCY INVERTERS

Introduction

Features

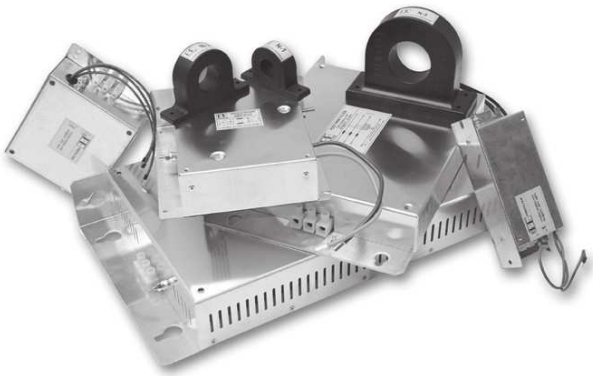

Three phase filter for frequency inverters/PDS.
"Foot-print" mounting.
High attenuation properties.
Small and ergonomic size.

Maximum operating voltage: 520Vac.
Operating frequency: DC - 60Hz.
Hipot test voltage: L/N->PE: 3000Vdc 2s.
L->N: 2250 Vdc 2s.
Application class:
HPF Acc. TO DIN 40040 (-25°C/+85°C/95% RH, 30d).
Flammability class: UL 94 V2.

Introduction to Inverter Filters

PREMO has developed a very comprehensive INVERTER EMC FILTER family including two specific sub families:
· Foot Print filters, for installation below the Inverter, and
· Filters for LIFTS (P-0999).
Each family is designed to meet the specific ElectroMagnetic Compatibility Standard for each product.

PREMO has the expertise and equipment to design customer specific EMC Filters; both in Electrical and Mechanical design.
In this Filter family, Premo Manufacture EMC Filters both Single-Phase and Three-Phase up to 900 Amps and voltages of 250V, 520V and 720V.

Inverter Connection Information

A. Ground all metallic conductive parts using suitable cables to a central point. Ensure that paint is removed from metalwork to provide a good earth contact.
B. The EMC Filter should be placed as close as possible to the inverter case.
C. Separate the motor cables and supply cables as much as possible.
D. Use shielded cable (with copper braid and earth wire) from the filter to the motor. Connect the shielding and earth at the both ends.
E. If required, use Output Ferrites in the motor cable – place the ferrites as close to the inverter as possible. Wind the motor cables around the ferrite (as least twice) but do not wind the shield or earth wires around the ferrite.
F. Follow the Inverter Manufacturers Installation instructions, making sure that earth is as good as possible.
G. Separate the motor and control cables as much as posible.
H. Use copper braid to connect the Electrical Control Panel with its Door, to provide a good earth connection.
I. Connect the motor frame direct to earth.

FOR FREQUENCY INVERTERS

Introduction

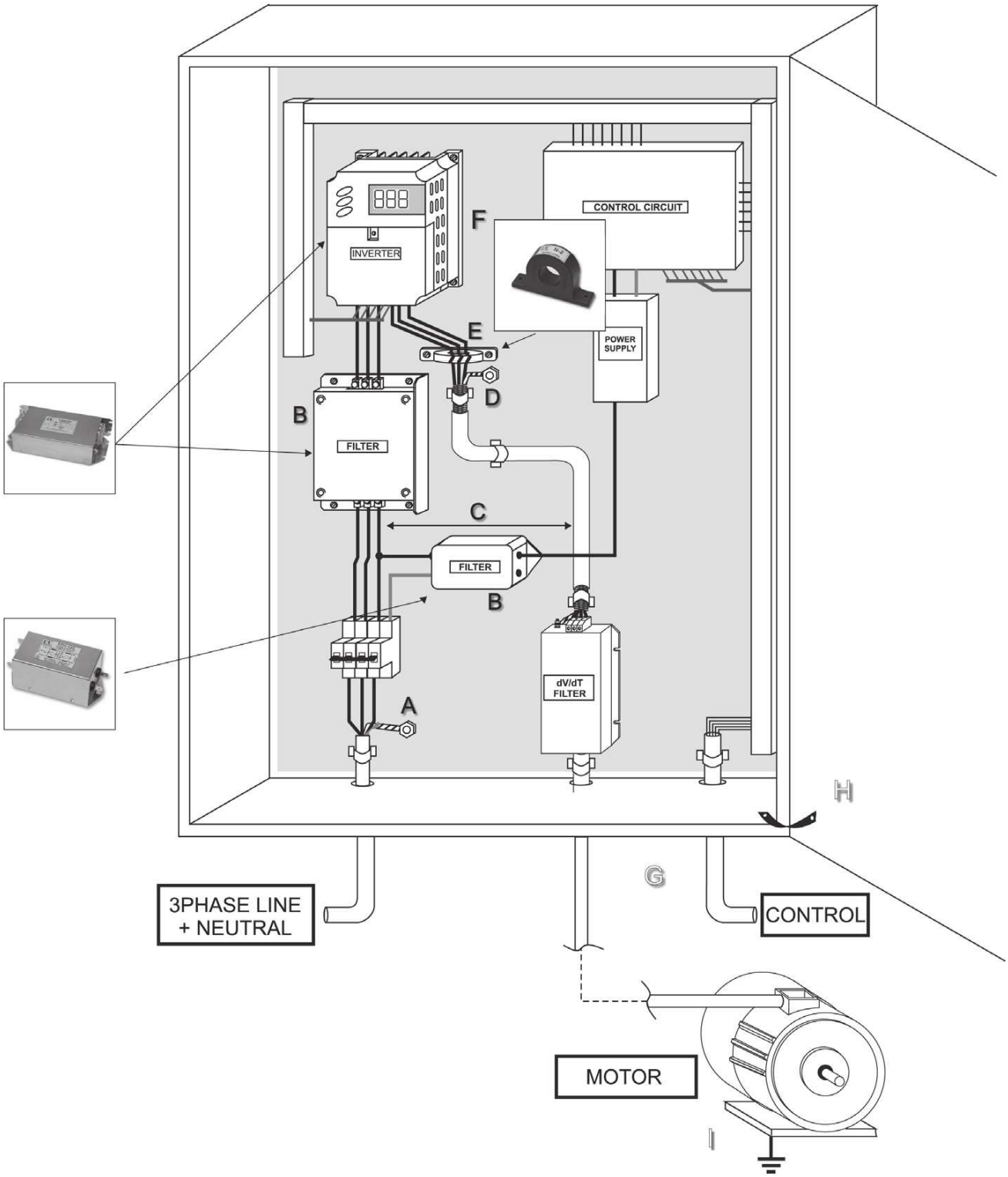

P-0999

Three-Phase Filters for Frequency Converters (36-60A)

Three phase filters specially designed for frequency inverters.

General Specifications

Maximum operating voltage: 520Vac.
Operating frequency: DC - 60Hz.
Hipot test voltage:
L/N->PE: 3000Vdc 2s.
Li-Lj: 2250 Vdc 2s.
Application class: HPF Acc. TO DIN 40040 (-25°C/+85°C/95% RH, 30d).
Flammability class: UL 94 V2.

Electrical schematics

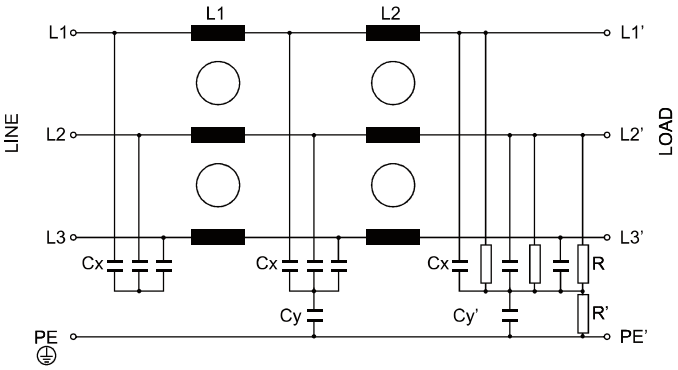

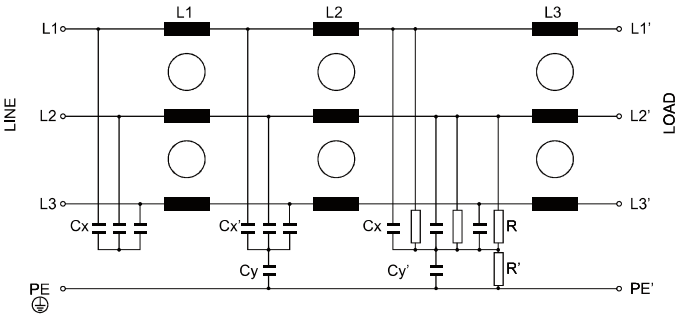

ONLY P-0999-007

Product List

Type	I	L	CX/CX'	CY/CY'	R/R'	Housing	Max. I_{leak} mA IEC 950	Max. I_{leak} mA 520V 50Hz	Connection	Weight ±g
X-0999-005	36 Amp	2,5 mH	2,2/- µF	100/330 nF	1 MΩ	309	40 mA	3,6 mA	10mm2	2400
X-0999-006	55 Amp	1,8 mH	2,2/- µF	100/470 nF	1 MΩ	310	54,8 mA	5 mA	16mm2	5700
X-0999-007	16 Amp	4,4 mH	1/-2,2 µF	100/330 nF	1 MΩ	309	40,7 mA	3,7 mA	4mm2	1900
X-0999-014	60 Amp	710µH	2,2/- µF	100/2,2µF	1000/680 KΩ	310	158 mA	15,9 mA	25mm2	7000

Insertion Loss

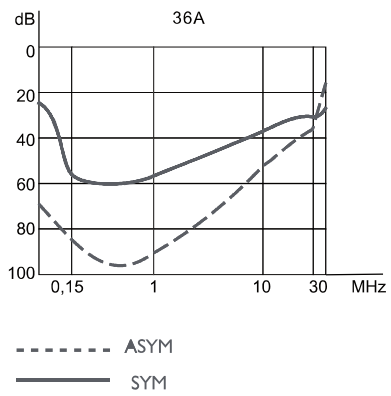

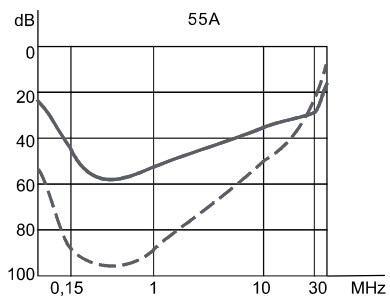

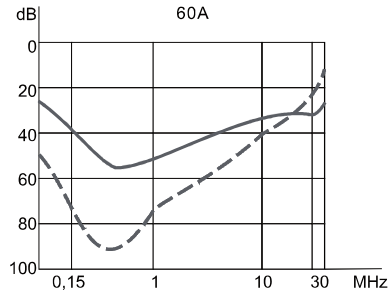

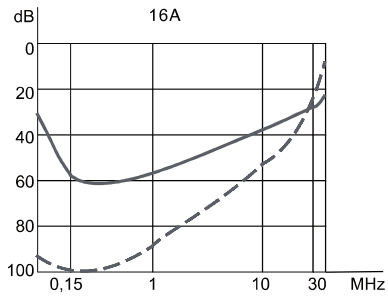

FEDC

EMC DC Filter for PV applications

Electrical schematic

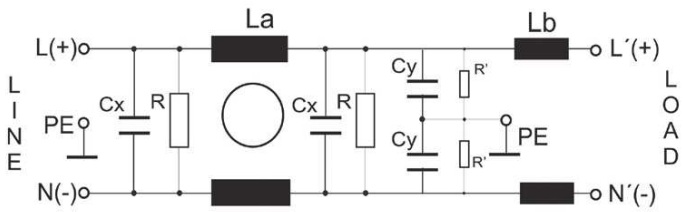

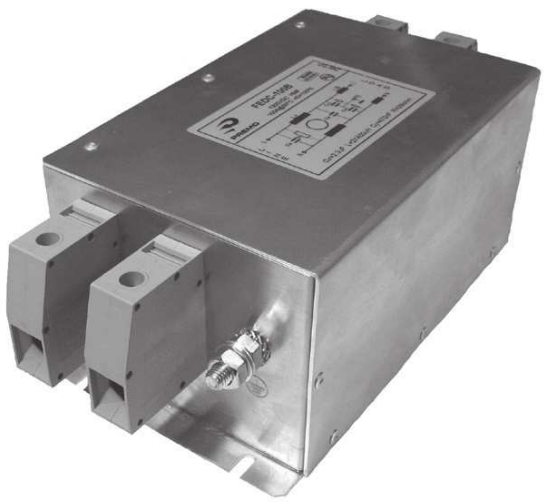

General Specifications

Maximum operating voltage: 1200 Vdc max.
Operating frequency: DC.
Hi-pot test voltage: L/N->PE: 3600Vdc 2s.
Li-Lj: 3000 Vdc 2s.
Application class: HMF Acc.TO DIN 40040 (-40°C/+100°C/95% RH, 30d).
Flammability class: UL 94 V2.

Single stage

For PV (Photovoltaic) Inverters.
For Other DC applications.
According to UL1283 and EN 60939.
* FEDC- xxxxx -LL – Without Cy Capacitors.

Product List

TYPE	Rated Current (A) @ 50 °c	Typical inverter AC Power rating (KW)	Power Losses (W) @ 25°C	Connection	Weight (Kg)
FEDC-25B FEDC-25B-LL	25	10	8	Terminal block 6 mm2 / AWG 8	1.0
FEDC-50B FEDC-50B-LL	50	20	17	Terminal block 16 mm2 / AWG 4	1.7
FEDC-75B FEDC-75B-LL	75	30	18	Terminal block 25 mm2 / AWG 2	1.8
FEDC-100B FEDC-100B-LL	100	40	22	Terminal block 50 mm2 / AWG 0	2.8
FEDC-150B FEDC-150B-LL	150	60	31	Terminal block 95 mm2 / AWG 00	5.0
FEDC-250P FEDC-250P-LL	250	100	10	Bus Bar 20x5,Ø9	5.2
FEDC-400P FEDC-400P-LL	400	150	16	Bus Bar 25x6,Ø11	6.3
FEDC-600P FEDC-600P-LL	600	250	29	Bus Bar 25x8,Ø11	6.6
FEDC-800P FEDC-800P-LL	800	350	26	Bus Bar 40x8,Ø14	9.5
FEDC-1000P FEDC-1000P-LL	1000	400	40	Bus Bar 40x8,Ø14	9.6
FEDC-1500P FEDC-1500P-LL	1500	500	45	Bus Bar 60x10,Ø14	15.0

FEDC

EMC DC Filter for PV applications

Mechanical Dimensions (mm)

MECHANICAL DIMENSIONS(mm)- 250A to 1500A

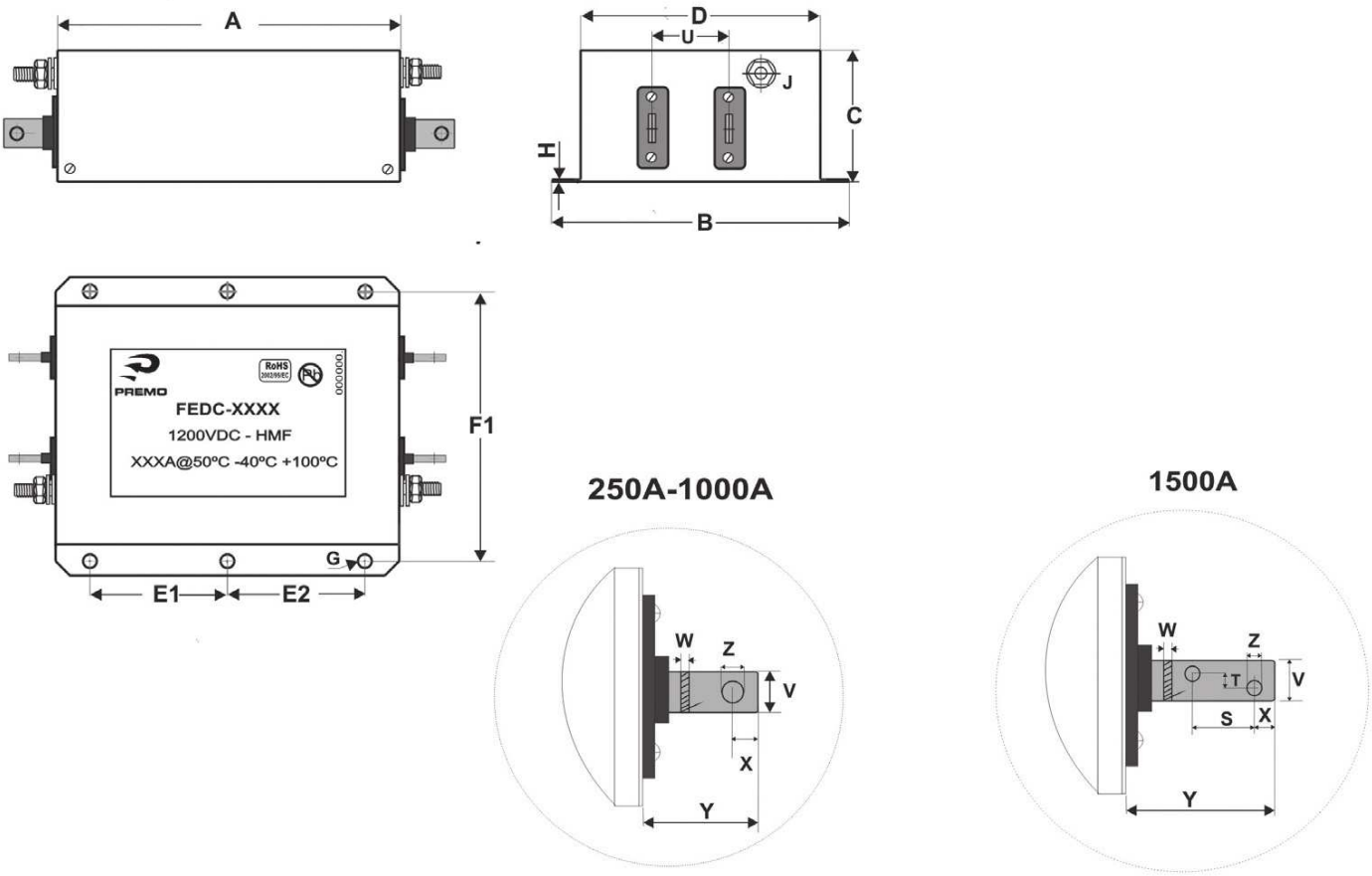

MECHANICAL DIMENSIONS(mm)- 25A to 150A

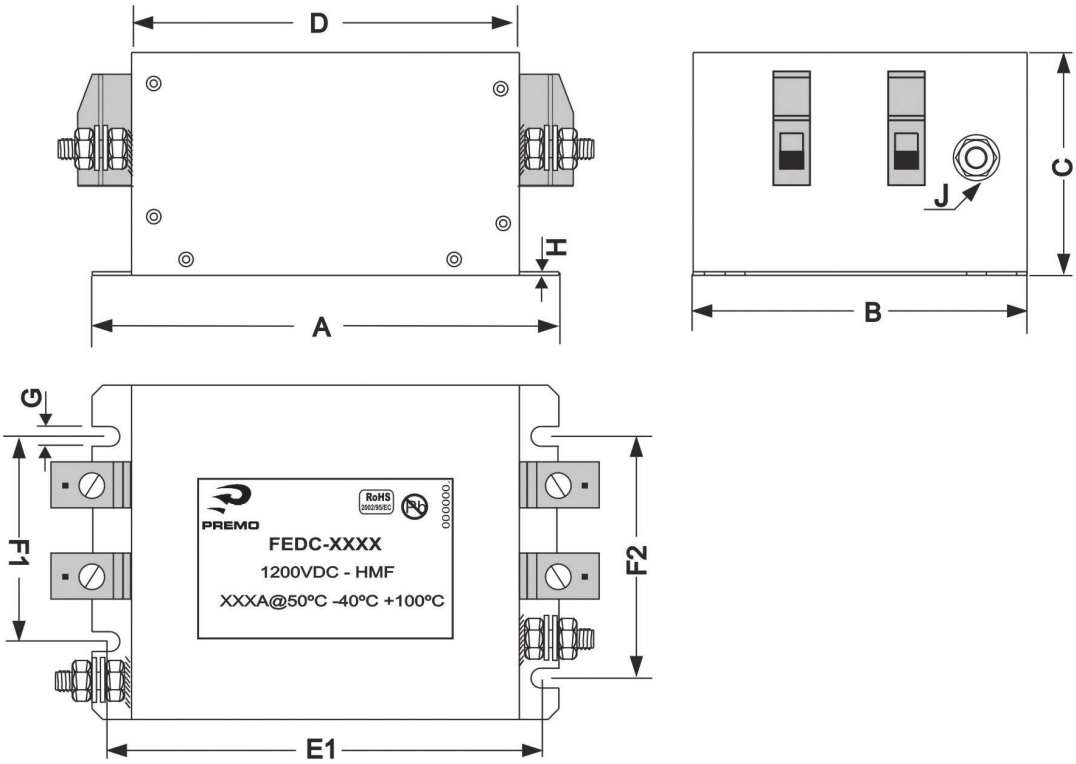

FEDC

EMC DC Filter for PV applications

Mechanical Dimensions (mm)

	25 A	50 A	75 A	100 A	150 A	250 A	400 A	600 A	800 A	1000 A	1500 A
A	170	200	200	220	250	300	300	300	300	300	300
B	80	95	95	125	140	180	190	190	200	200	200
C	65	80	80	95	115	110	110	110	140	140	150
D	140	170	170	190	220	130	140	140	150	150	150
E1	152,5	182,5	182,5	202,5	202,5	130	130	130	130	130	130
E2						110	110	110	110	110	110
F1	45	60	60	80	100	155	165	165	175	175	175
F2	60	75	75	100	120						
G	5,5	5,5	5,5	5,5	5,5	Ø12	Ø12	Ø12	Ø12	Ø12	Ø12
H	1	1,5	1,5	1,5	2	2	2	2	3	3	3
J	M5	M6	M6	M8	M10	M10	M10	M10	M12	M12	M12
S											43
T											26
U						70	70	70	70	70	70
V						20	25	25	40	40	60
W						5	6	8	8	8	10
X						15	15	15	20	20	17
Y						58	58	58	65	65	100
Z						Ø9	Ø11	Ø11	Ø14	Ø14	Ø14

Insertion Loss

25 to 75A

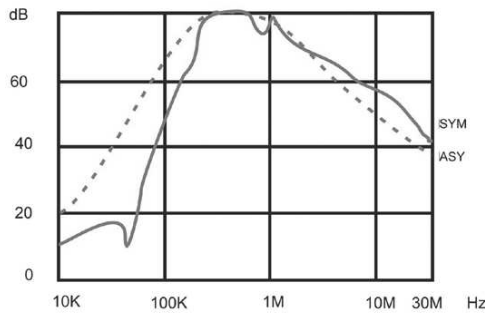

250A

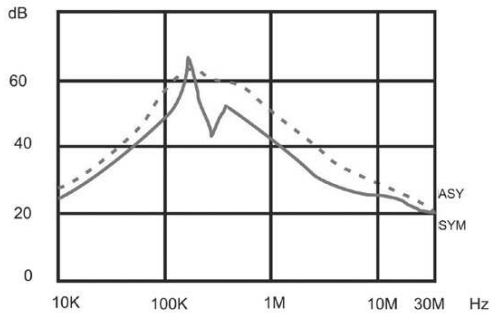

100 to 150A

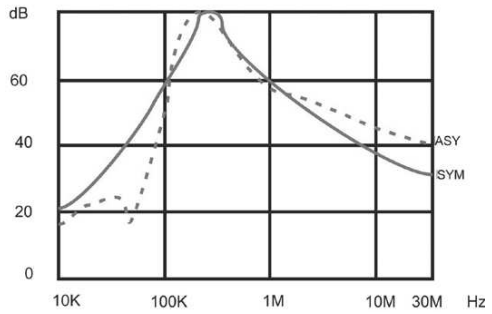

400 to 1500 A

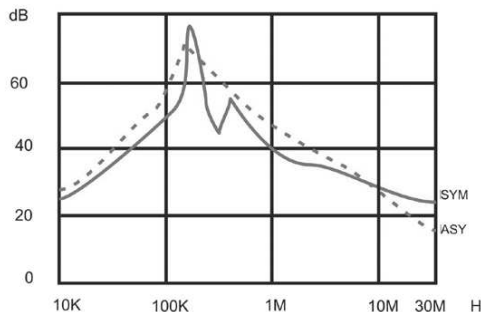

FVTO-IV

Three-Phase Filters for Frequency Converters without Neutral (7-180A)

Electrical schematic

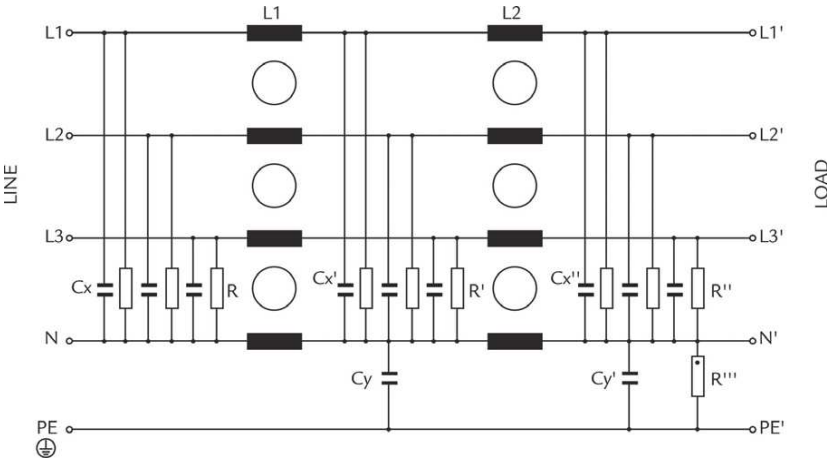

General Specifications

Maximum operating voltage: 520Vac.
Operating frequency: DC - 60Hz.
Hipot test voltage: L/N->PE: 3000Vdc 2s.
L->N: 1300 Vdc 2s.
Li->Lj: 2250 Vdc 2s.
Application class: HPF Acc. TO DIN 40040 (-25°C/+85°C/95% RH, 30d).
Flammability class: UL 94 V2.

Three Phase + Neutral Filters, Double Stage

Three phase + neutral filter for frecuency inverters/PDS.
"Foot-print" mounting.
High attenuation properties.
Small and ergonomic size.

Product List

Type	I	L	CX/CX'/CX"	CY/CY'	R/R'	HOUSING	Max. Ifug mA IEC 950	Max. Ifug mA 400V 50Hz	CONNECTION Hx0 Ø M+N
FVTO6IV	6 Amp	5 mH	1 µF	47nF/470nF	/-/680KΩ/680K Ω/1MΩ	406	47,6 mA	4,5 mA	6mm2
FVTO10IV	10 Amp	5 mH	1 µF	47nF/470nF	680KΩ/680KΩ/-/-	405	47,6 mA	4,5 mA	M4 SCREW
FVTO12IV	12 Amp	5 mH	2,2µF	47nF/470nF	/-/680KΩ/680KΩ/1MΩ	406	51,8 mA	4,7 mA	6mm2
FVTO20IV	20 Amp	2 mH	2,2µF	47nF/1µF	680KΩ/680KΩ/-/-	409	97,6 mA	9,28 mA	M6 SCREW
FVTO20IVB	20 Amp	2 mH	2,2µF	47nF/1µF	680KΩ/680KΩ/-/-	407	97,6 mA	9,28mA	4mm2
FVTO30IV	30 Amp	1,2 mH	2,2µF	150nF/220nF	680KΩ/-/-/-	408	37,8 mA	3,4 mA	10mm2
FVTO40IV	40 Amp	1,2 mH	2,2µF	150nF/220nF	680KΩ/-/-/-	408	37,8 mA	3,4 mA	10mm2
FVTO60IV	60 Amp	1,5 mH	2,2µF	330nF/2,2µF	680KΩ/-/-/330KΩ	408	187 mA	19,4 mA	10mm2
FVTO60IVB	63 Amp	1,5 mH	2,2µF	330nF/2,2µF	680KΩ/-/-/330KΩ	411	187 mA	19,4 mA	25mm2
FVTO80IV	80 Amp	170 µH	2,2µF	150nF/220nF	680KΩ/-/-/-	413	16 mA	1,4 mA	M10 SCREW
FVTO80IVB	80 Amp	170 µH	2,2µF	150nF/220nF	680KΩ/-/-/-	310	16 mA	1,4 mA	25mm2
FVTO100IV	100 Amp	170 µH	2,2µF	150nF/220nF	680KΩ/-/-/-	413	16 mA	1,4 mA	M10 SCREW
FVTO150IV	150 Amp	160 µH	4,4/4,4/2,2µF	470nF/470nF	/-/-/1MΩ/330KΩ	413	38,9 mA	3,4 mA	M10 SCREW
FVTO180IV	180 Amp	160 µH	4,4/4,4/2,2µF	100nF/2,2µF	/-/-/1MΩ/680KΩ	413	190 mA	18,4 mA	M10 SCREW

FVTO-IV

Three-Phase Filters for Frequency Converters without Neutral (7-180A)

Insertion Loss

ASYM
SYM

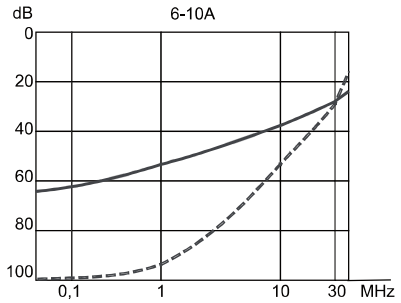

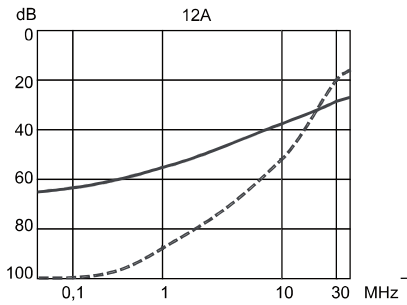

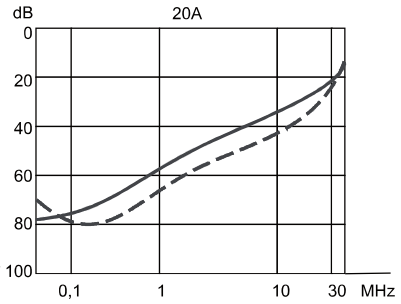

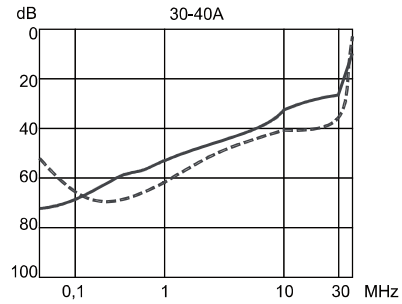

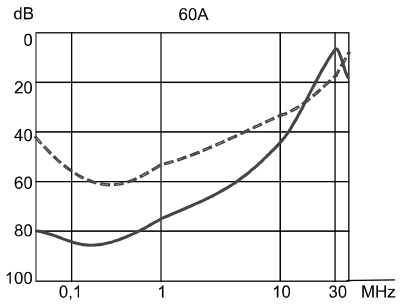

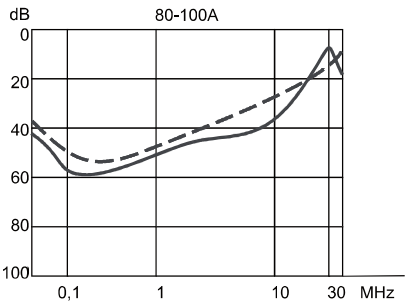

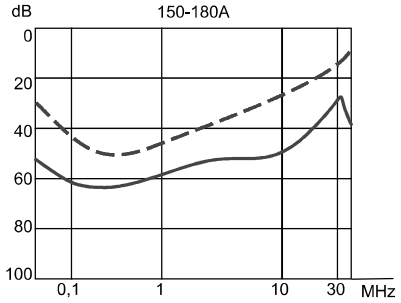

PFT

Three-Phase + Neutral Filters for General Use (3-150A)

Electrical schematics

Only for 3/6/10/20Amp

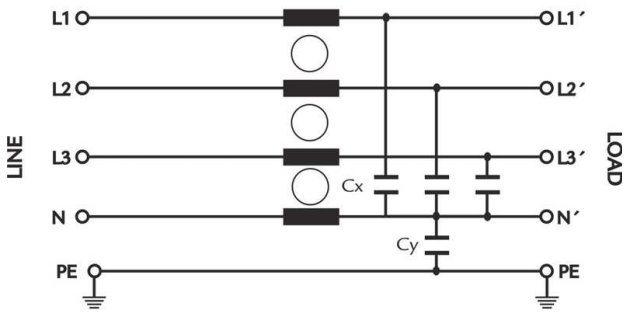

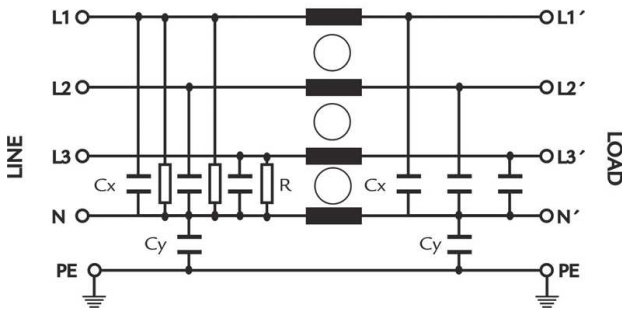

Three phase + Neutral filters

Single stage three phase + neutral filter.
For switching applications.

General Specifications

Maximum operating voltage: 520Vac.
Operating frequency: DC - 60Hz.
Hipot test voltage: L/N->PE: 3000Vdc 2s.
L->N: 1300 Vdc 2s
Li->Lj: 2250 Vdc 2s.
Application class: HPF Acc. TO DIN 40040 (-25°C/+85°C/95% RH, 30d).
Flammability class: UL 94 V2.

Product List

Type	I@40°C	L1	CX/CX'	CY	R	HOUSING	Max. Ifug mA IEC 950	Max. Ifug mA 400V 50Hz	CONNECTION	WEIGHT ±g
PFT-3Z	3 Amp	1 mH	0,1 µF	20 nF	--	401	485 µA	43 µA	FASTON 6,3mm	220
PFT-6Z	6 Amp	0,45 mH	0,1 µF	4,7 nF	--	401	485 µA	43 µA	FASTON 6,3mm	220
PFT-10Z	10 Amp	0,2 mH	0,1 µF	4,7 nF	--	401	485 µA	43 µA	FASTON 6,3mm	240
PFT-20Z	20 Amp	0,2 mH	0,1 µF	22 nF	--	401	1,9 mA	191 µA	FASTON 6,3mm	240
PFT-20W		0,2 mH	0,1 µF	22 nF		402	1,9 mA	191 µA	M6 SCREW	550
PFT-25B	25 Amp	1,3 mH	2,2 µF	15 nF	110 KΩ	403	3,2 mA	280 µA	4mm2	1500
PFT-25W						404			M6 SCREW	
PFT-36B	36 Amp	1 mH	2,2 µF	15 nF	110 KΩ	403	3,2 mA	280 µA	6mm2	1500
PFT-36W						404			M6 SCREW	
PFT-50B	50 Amp	0,55 mH	2,2µF/100 nF	15 nF	1MΩ	403	3,2 mA	280 µA	10mm2	1700
PFT-50W						404			M6 SCREW	
PFT-65B	65 Amp	0,36 mH	2,2 µF	22 nF	1MΩ	403	4,7 mA	412 µA	10mm2	1700
PFT-65W						404			M6 SCREW	
PFT-80B	80 Amp	0,5 mH	1 µF	22 nF	470kΩ	410	4,7 mA	410 µA	25mm2	3000
PFT-80W					470kΩ	412			M10 SCREW	
PFT-110B	110 Amp	0,25 mH	1 µF	22 nF		410	4,7 mA	410 µA	50mm2	3200
PFT-110W					470kΩ	412			M10 SCREW	
PFT-150B	150 Amp	0,25 mH	2,2 µF	22 nF		410	4,7 mA	412 µA	50mm2	3500
PFT-150W					110KΩ	412			M10 SCREW	

PFT

Three-Phase + Neutral Filters for General Use (3-150A)

Insertion Loss

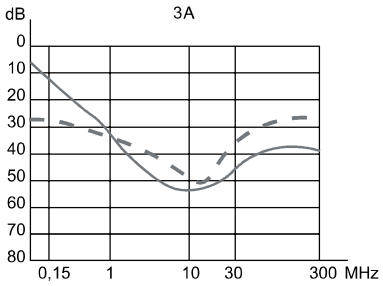

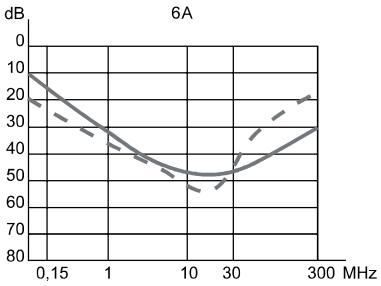

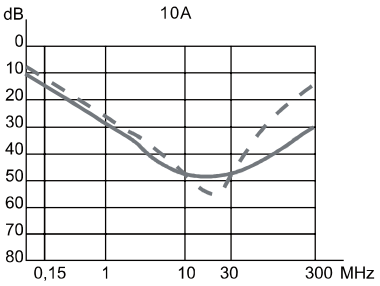

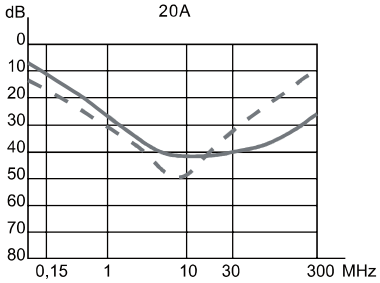

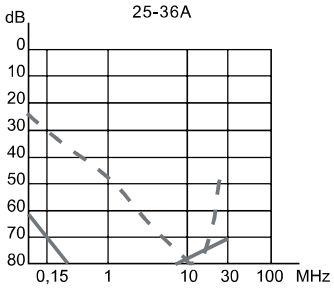

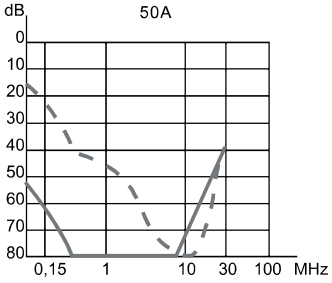

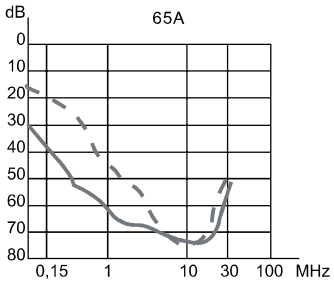

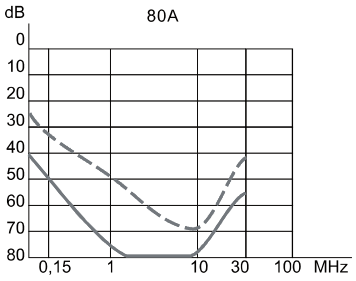

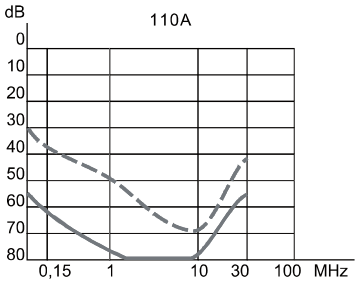

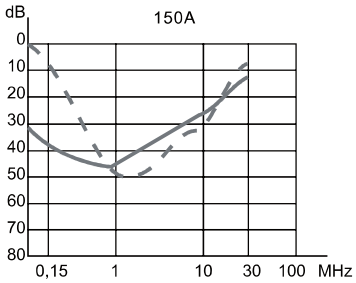

ASYM

SYM

STF

Three-Phase + Neutral Filters for Solar Technology Applications (8-200A)

General Specifications

Maximum operating voltage: 520 Vac
Operating frequency: DC – 60Hz
Hipot test voltage: L/N->PE: 3000 Vdc 2s
Li-Lj: 2250 Vdc 2s
Application class: HMF Acc. TO DIN 40040
(-25°C/+100°C/95% RH, 30d)
Flammability class: UL 94 V2

Three Phase + Neutral Filters

Single stage
Solar technology applications
Compact model for saving space
Low leakage current

Electrical schematic

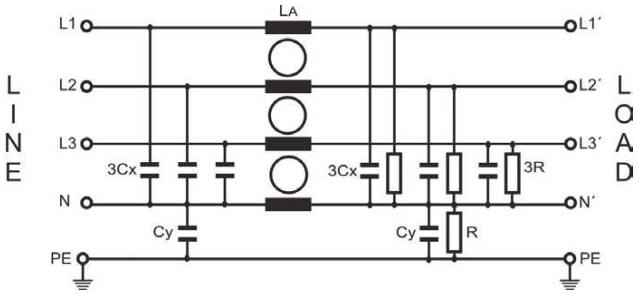

Product List

Type	Rated Current (A) @ 50 °c	Leakage Current (mA)	Power Losses (W)	Connection	Weight (Kg)	Housing
STF-008HV	8	<1	2,7	Terminal block 4 mm2 / AWG 10	0,8	50
STF-016HV	16	<1	6	Terminal block 4 mm2 / AWG 10	0,8	50
STF-025HV	25	<1	11,6	Terminal block 10 mm2 / AWG 6	1,3	51
STF-036HV	36	<1	14,8	Terminal block 10 mm2 / AWG 6	1,6	51
STF-064HV	64	<1	18,4	Terminal block 25 mm2 / AWG 2	2,7	52
STF-080HV	80	<1	18,9	Terminal block 50 mm2 / AWG 0	4,1	53
STF-120HV	120	<1	28,5	Terminal block 50 mm2 / AWG 0	5,9	54
STF-160HV	160	<1	30,7	Terminal block 95 mm2 / AWG 000	7,9	55
STF-200HV	200	<1	46,8	Terminal block 95 mm2 / AWG 000	8,5	55

STF

Three-Phase + Neutral Filters for Solar Technology Applications (8-200A)

Insertion Loss

——— ASYM
— — — SYM

8/36A

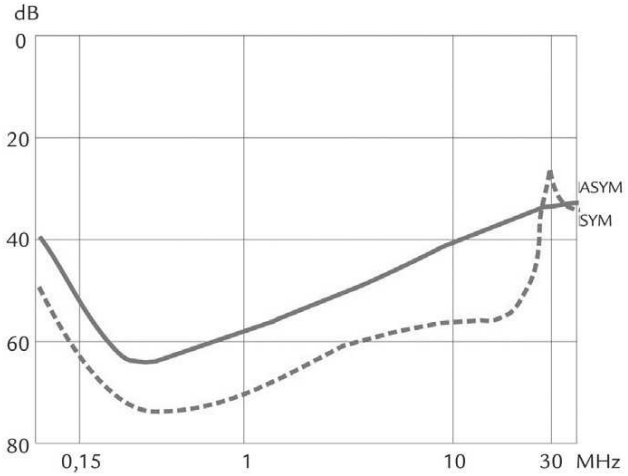

64/80

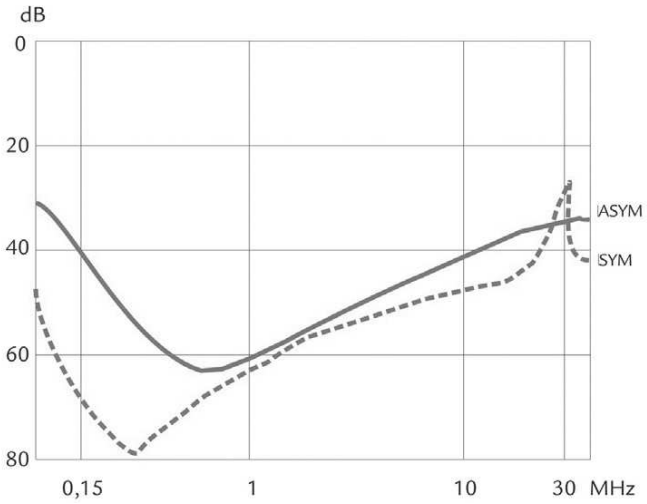

120A

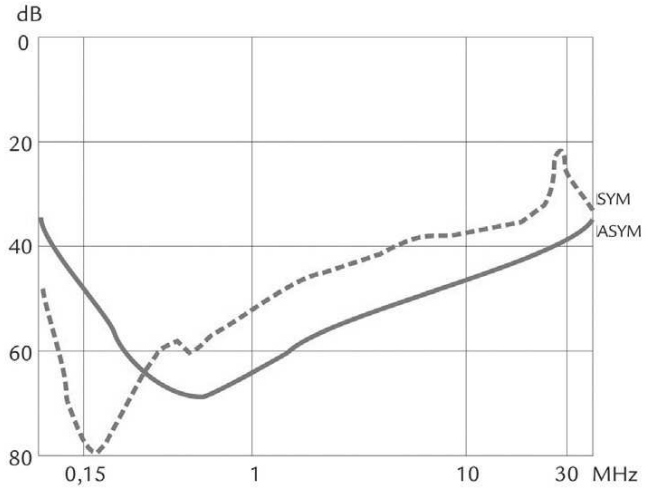

160/200A

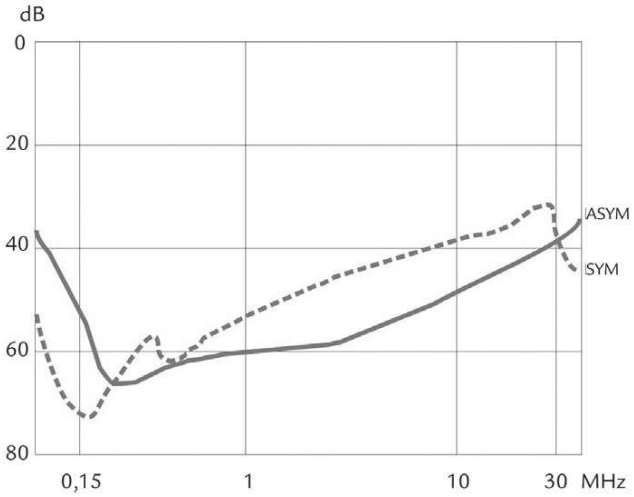

FVNSB

Three-Phase + Neutral Filters for Industrial Applications (8-200A)

General Specifications

Maximum operating voltage: 520 Vac
Operating frequency: DC – 60Hz
Hipot test voltage: L/N->PE: 2750 Vdc 2s
Li-Lj: 2250 Vdc 2s
Application class: HMF Acc. TO DIN 40040 (-25°C/+100°C/95% RH, 30d)
Flammability class: UL 94 V2

Three Phase One stage

For Industrial machinery units
Compact size with Neutral Line

Electrical schematic

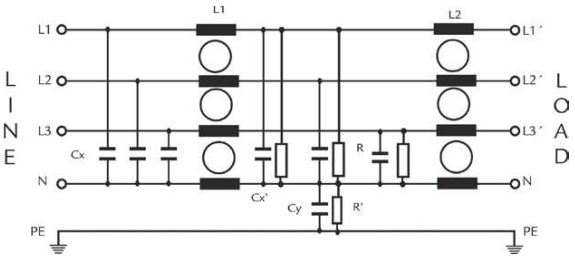

Product List

Type	Rated Current (A) @ 50 °c	Leakage Current (mA)	Power Losses (W)	Connection	Weight (Kg)
FVNSB-008B	8	<1	2,7	Terminal block 4 mm2 / AWG 10	0,8
FVNSB-016B	16	<1	6	Terminal block 4 mm2 / AWG 10	0,8
FVNSB-025B	25	<1	11,6	Terminal block 10 mm2 / AWG 6	1,3
FVNSB-036B	36	<1	14,8	Terminal block 10 mm2 / AWG 6	1,6
FVNSB-064B	64	<1	18,4	Terminal block 25 mm2 / AWG 2	2,7
FVNSB-080B	80	<1	18,9	Terminal block 50 mm2 / AWG 0	4,1
FVNSB-120B	120	<1	28,5	Terminal block 50 mm2 / AWG 0	5,9
FVNSB-160B	160	<1	30,7	Terminal block 95 mm2 / AWG 000	7,9
FVNSB-200B	200	<1	46,8	Terminal block 95 mm2 / AWG 000	8,5

FVNSB

Three-Phase + Neutral Filters for Industrial Applications (8-200A)

Mechanical dimensions (mm)

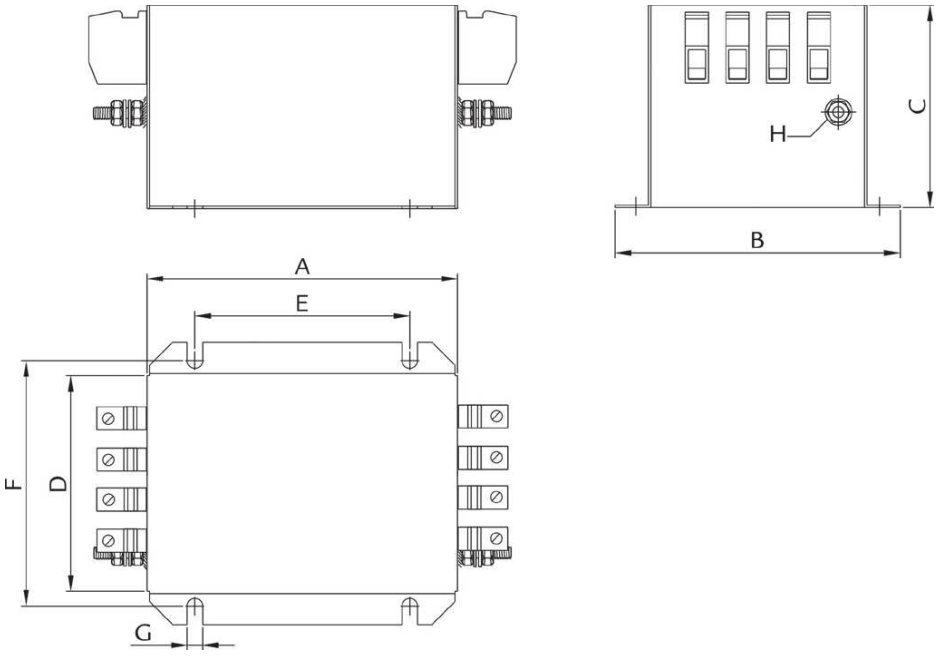

	8A	16 A	25 A	36 A	64 A	80 A	120 A	160 A	200 A
A	120	120	130	130	160	230	250	280	280
B	143	143	153	153	153	163	170	170	170
C	80	80	115	115	125	125	140	170	170
D	115	115	125	125	125	135	140	140	140
E	80	80	90	90	100	120	200	230	230
F	127.5	127.5	137.5	137.5	137.5	147.5	153.5	153.5	153.5
G	6.5	6.5	6.5	6.5	6.5	6.5	6.5	6.5	6.5
H	M6	M6	M6	M6	M10	M10	M10	M10	M10

Insertion Loss ——— ASYM

- - - - - - - SYM

8 & 16A

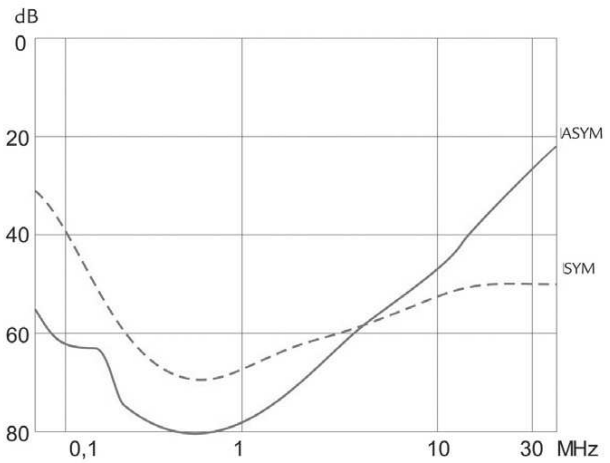

25 &36A

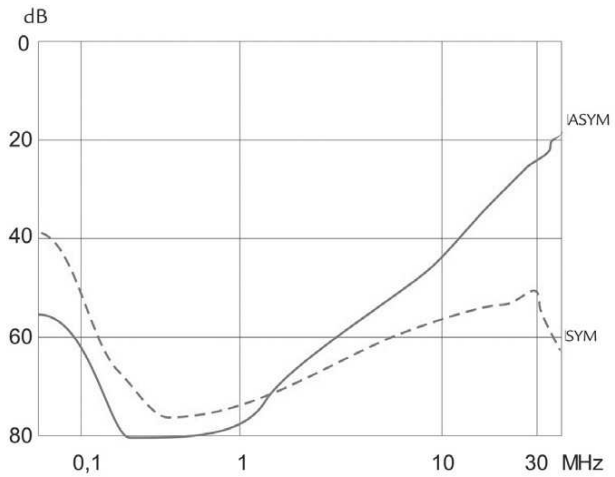

FVNSB

Three-Phase + Neutral Filters for Industrial Applications (8-200A)

64 ~ 120A

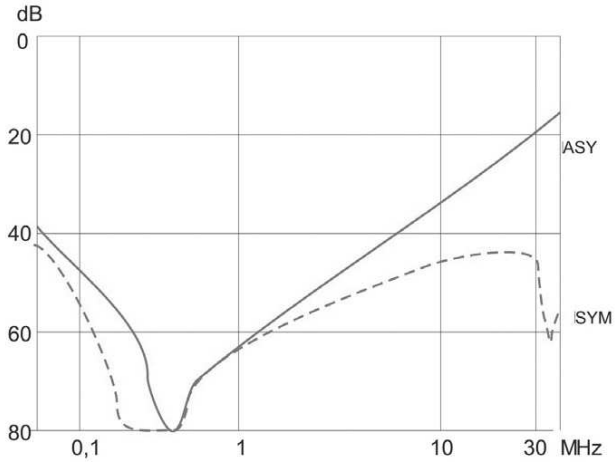

160 ~ 200A

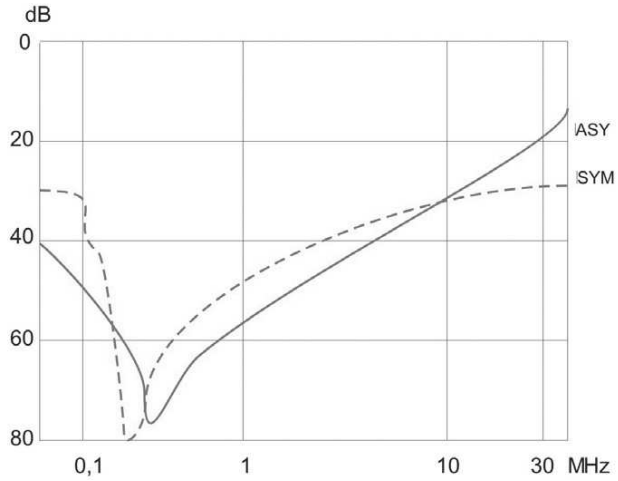

N-X

Inverter Output Ferrites

General Specifications

Output Ferrites (N-X) are especially effective in reducing electromagnetic interference from the motor cable, as they introduce an impedance between the Inverter and the motor. Output ferrites are particularly useful in reducing electrical noise in the frequency range 5 to 20 MHz, as there is no other suitable noise suppression means in this frequency range. Output ferrites should be placed around the cable between the Inverter and Motor, as near as possible to the Inverter. The cable (excluding earth wires and shielding) should pass through the ferrite at least twice.

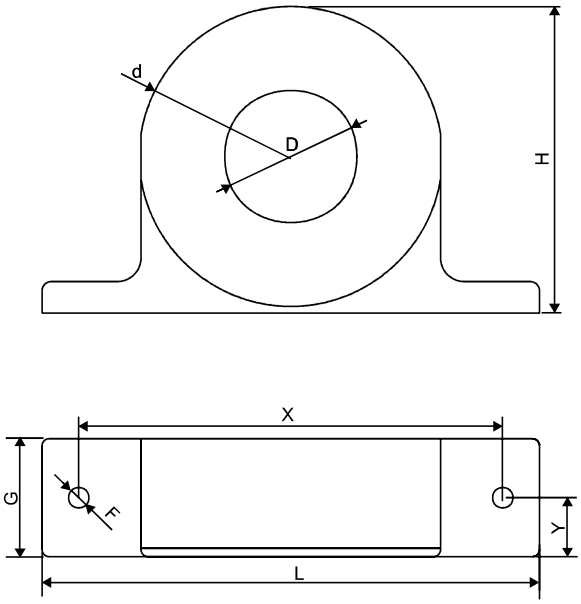

N-1/N-2

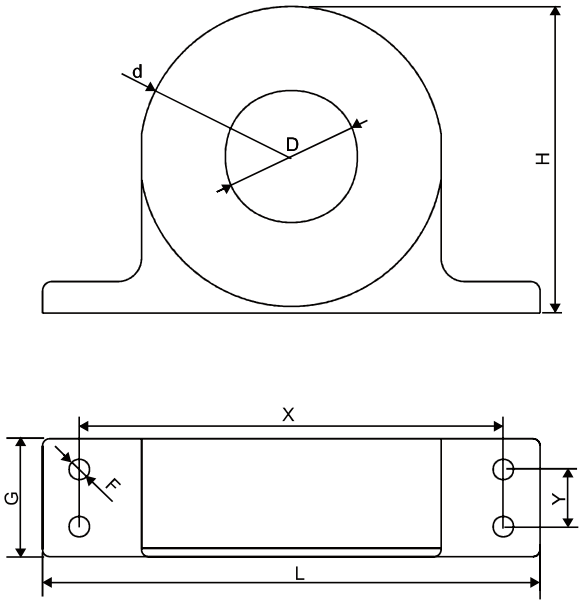

N-3

N-X

Inverter Output Ferrites

Product List

Type	N1			N2			N3		
Number of turns	2	3	4	2	3	4	2	3	4
Wire section	10mm2	6mm2	4mm2	16mm2	10mm2	6mm2	50mm2	35mm2	25mm2
Inductance	38µH	86µH	153µH	44µH	90µH	176µH	25,6µH	57,6µH	102µH
Max Current	60A	45A	30A	90A	65A	46A	150A	100A	75A
H	50mm			65mm			110mm		
L	86mm			105mm			150mm		
G	24mm			25mm			50mm		
D	21mm			28mm			50mm		
d	48mm			64mm			108mm		
F	4mm			4mm			5mm		
X	70mm			89mm			125mm		
Y	11,5mm			12,5mm			30mm		

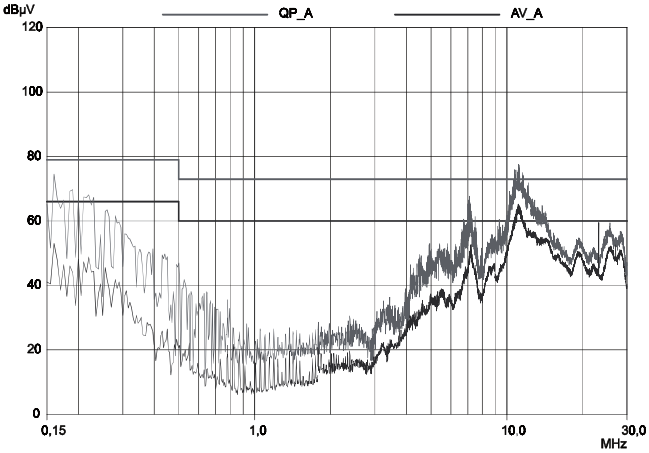

Without ferrites

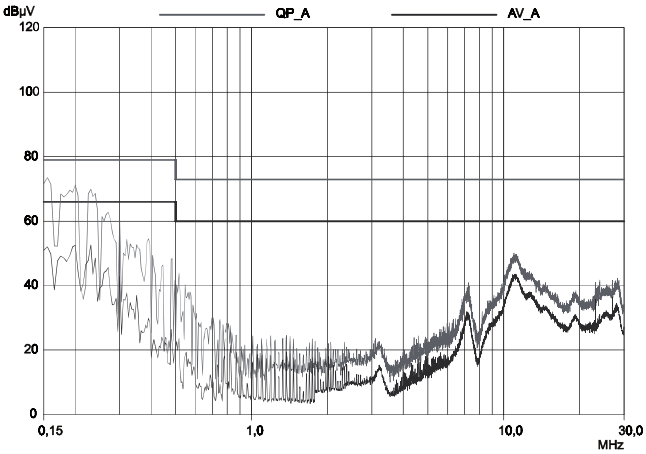

With ferrites

FOVT

DV/DT Output Filters (8-70A)

General Specifications

Maximum operating voltage: 550V±15.
Operating frequency: 50-60Hz.
Hipot test voltaje: L/N -> PE: 3000Vdc 2s.
Li-Lj: 2250Vdc 2s.
Application class:
HMF Acc. TO DIN 40040
(-25°C/+100°C/95% RH, 30d).
Flammability class: UL 94 V2.
Inverter Switching Frequency: 4-16kHz.
Max. Length of motor cable: 50m.

Electrical schematics

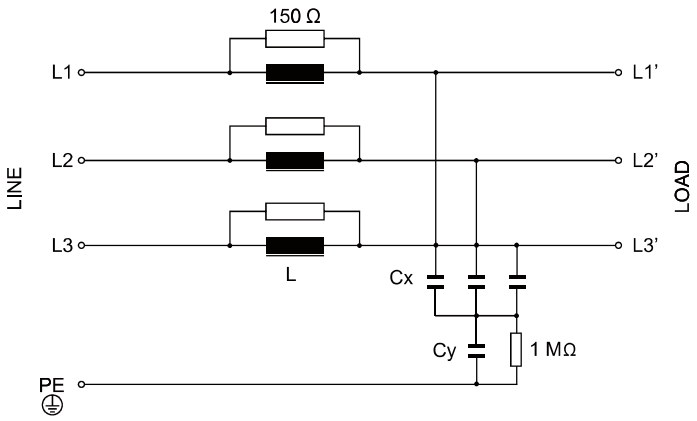

dV/dT Output Filter
Output 3 phase filter for inverter.
Minimizes Frequency Inverter dV/dT Values.
For long motor cables.
Increases motor life.
Reduces motor heating.

Product List

Type	I@50°C	L	CX	CY	$L_{leakage}$	Connection	Weight ±g
FOVT-008B	8 Amp	0,2 mH	4,7 nF	100 nF	258 µA	4mm²	1600
FOVT-016B	16 Amp	0,2 mH	4,7 nF	100 nF	258 µA	4mm²	2200
FOVT-025B	25 Amp	0,2 mH	4,7 nF	100 nF	258 µA	6mm²	4500
FOVT-036B	36 Amp	0,2 mH	4,7 nF	100 nF	258 µA	10mm²	5800
FOVT-055B	55 Amp	0,2 mH	10 nF	100 nF	320 µA	16mm²	6500
FOVT-070B	70 Amp	0,08 mH	10 nF	100 nF	320 µA	25mm²	7200

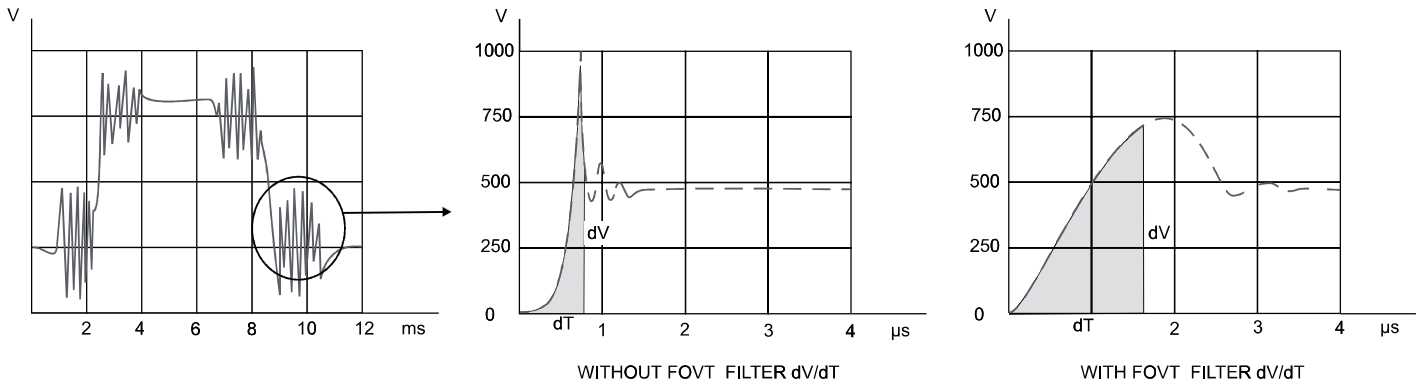

FOVT

DV/DT Output Filters (8-70A)

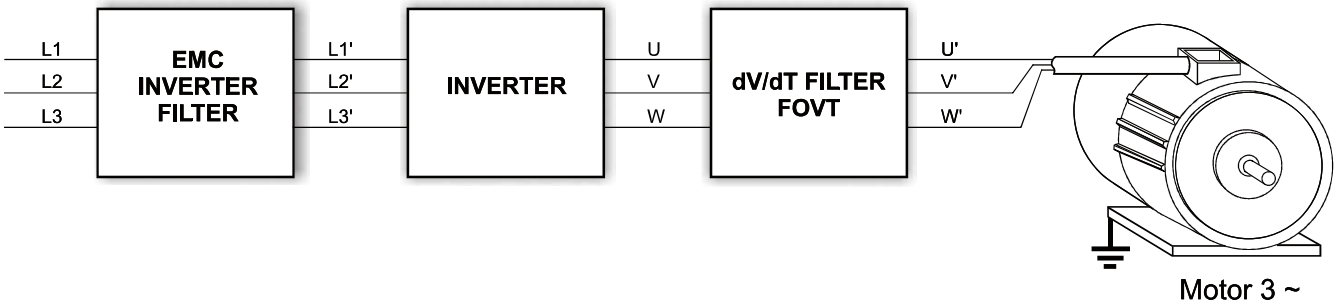

Fast switching generated by inverter IGBTs causes high voltage ramps (greater than 4000V/µs), that may be even higher in the motor windings. The fast switching can also shorten the motor life and limit maximum cable lengths.
By using a PREMO EMC dV/dT filter, you can guarantee that the maximum peak voltage will be under 1000V, with a dV/dT value less than 500 V/µs.
This voltage peak suppression will also reduce EMI interference from the inverter, will increase its life and improve its performance.

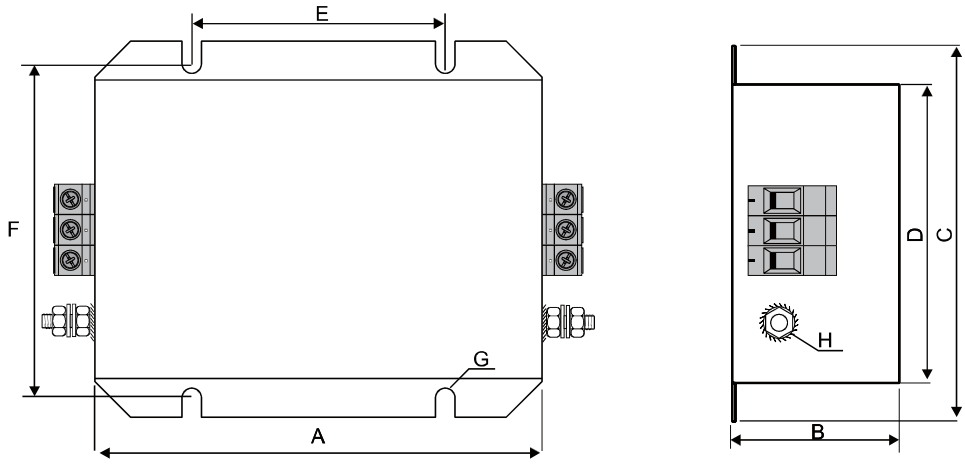

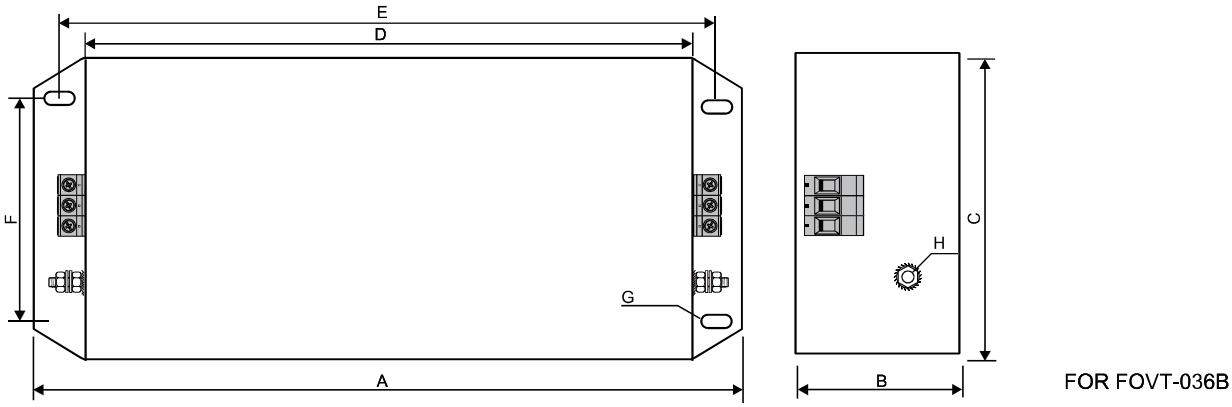

FOR FOVT-036B

	A	B	C	D	E	F	G	H
FOVT-008B	99	58	105	85	51	95	5,3	M6
FOVT-016B	150	56	100	126	85	116	5,3	M6
FOVT-025B	231	71	119	151	115	135	5,3	M6
FOVT-036B	350	81	149	300	325	110	6,5	M6
FOVT-055B	350	81	149	300	325	110	6,5	M6
FOVT-070B	380	90	180	320	345	120	8,5	M8

FOVT

DV/DT Output Filters (8-70A)

Type	Motor cable length (M) at Inverter switching frequency based on 400VAC, @40°C	
	Continuous Operation	
	4KHz	8KHz
FOVT-008B	35	15
FOVT-016B	35	15
FOVT-025B	50	25
FOVT-036B	50	25
FOVT-055B	50	25
FOVT-070B	50	25

CFT

Single Line C-Circuit (10-250A)

General Specifications

Maximum operating voltage: 250VAC / 400VDC.
Operating frequency: DC - 60Hz.
Hi-pot test voltage: L/N->PE: 3000Vdc 2s.
Climatic category: HPF (40/085/56)
(-40°C/+85°C/95% RH, 30d).
MTBF: > 0.3 Million Hours@40°C, 230VAC
Flammability class: UL 94 V0.

Single Line, C Circuit

For Telecom, Military and Industrial application.
Compact size and easy to install.

Electrical schematics

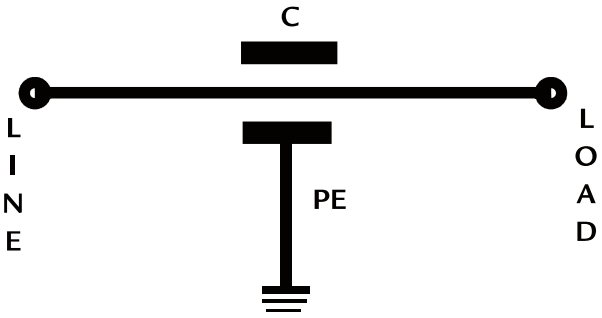

Product List

Type	Rated Current (A) @40°C	Rated Capacitance @1KHz, 25 °C	Leakage Current 250VAC/ 50Hz (mA)	Termination	Torque on S (Nm)	Mounting Thread	Weight (gr)
X-10290-013	10	4.7 nF	0.5	M3	0.5	M10 x 1	25
X-10290-018	16	100 nF	12.0	M4	1.2	M12 x 1	35
X-10290-019	32	100 nF	12.0	M4	1.2	M16 x 1	35
X-10290-020	63	100 nF	12.0	M6	2.5	M16 x 1	45
X-10290-021	100	100 nF	12.0	M8	5.0	M20 x 1	120
X-10290-023	200	100 nF	12.0	M10	8.0	M24 x 1	140
X-10290-022	250	100 nF	12.0	M12	11.0	M31 x 1.5	200

CFT

Single Line C-Circuit (10-250A)

Mechanical dimensions (mm)

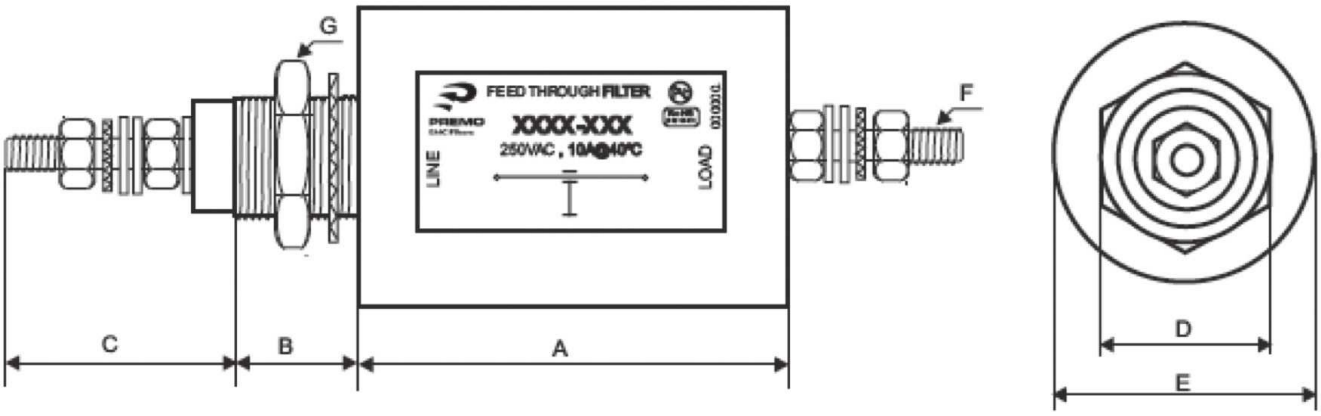

	10A	16A	32A	63A	100A	200A	250A
A	19	30	30	30	33	33	42
B	10	14	14	14	16	19	19
C	16	18	18	18	32	40	46
D	13	22	22	26	27	27	41
E	15	25	25	25	32	38	54
F	M3	M4	M4	M6	M8	M10	M12
G	M10 x 1	M16 x 1	M16 x 1	M16 x 1	M20 x 1	M24 x 1	M32 x 1.5

Installation Guide

- The torque applied to the screw cannot exceed max level.
- Filter metal housing must be well connected to cabinet panel by electrically and make good grounding.
- The input & output wires should be separated to avoid noise coupling.
- Input wire of filter connection should be short and it will help to minimize radiated interferences.
- Make good insulation around the connection part to avoid short circuit.
- Further information, please contact PREMO Technical person.

CFT

Single Line C-Circuit (10-250A)

Insertion Loss

10A

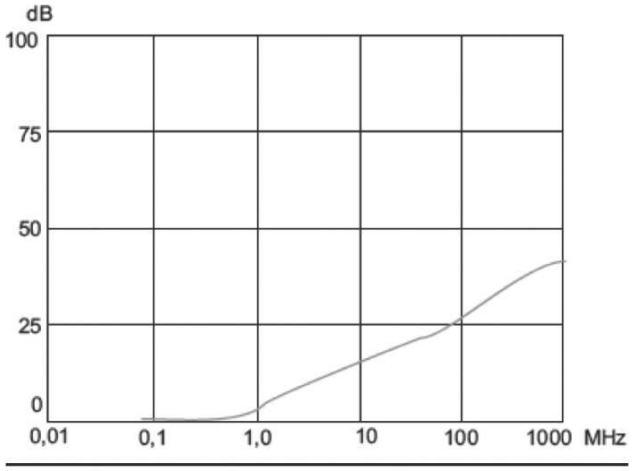

16A

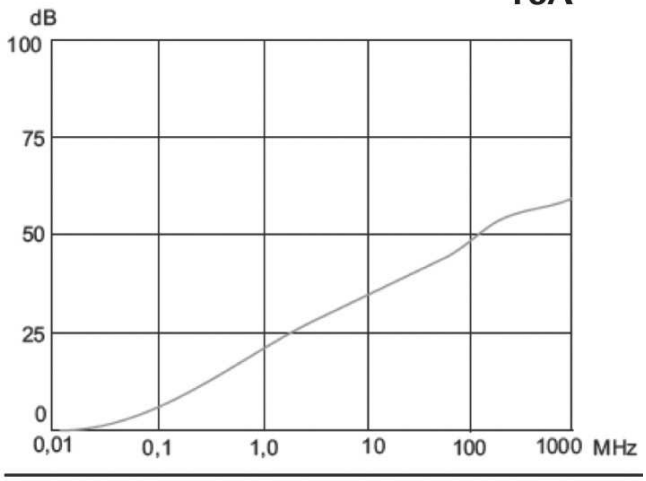

32A

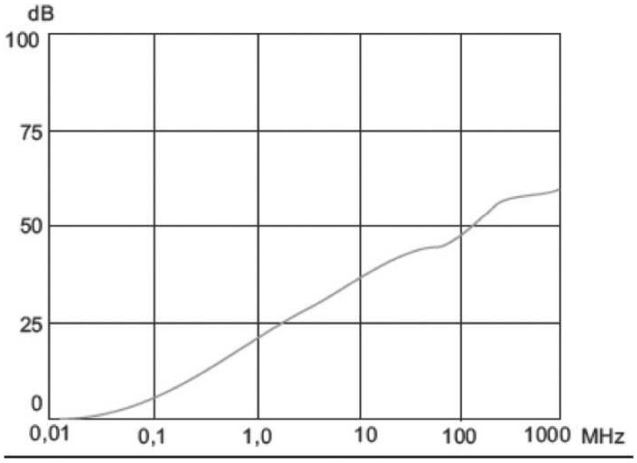

63A

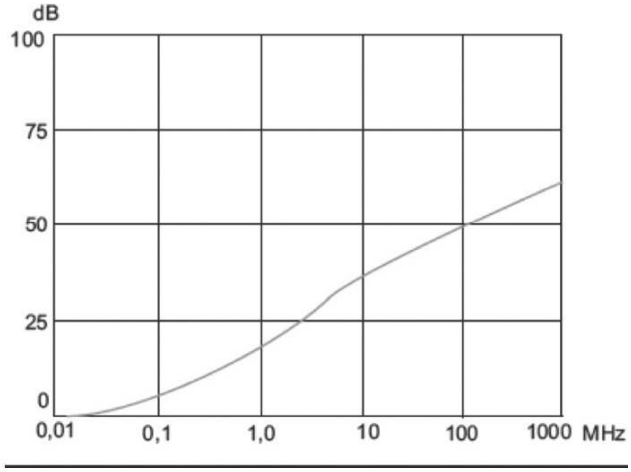

100A

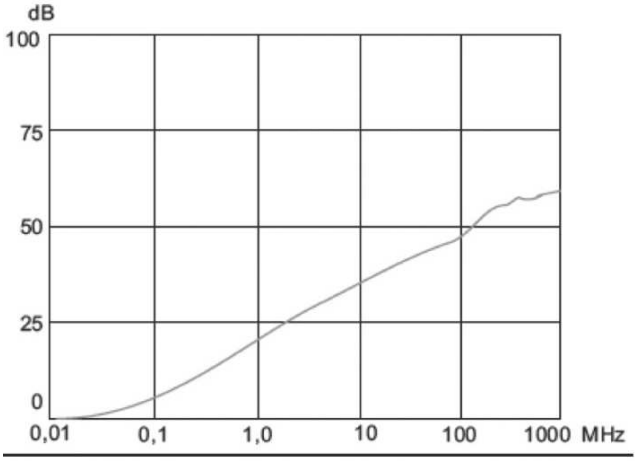

200&250A

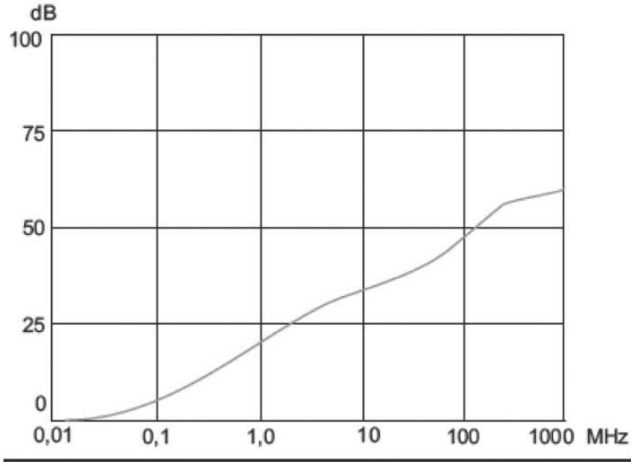

PIFT

Single Line Pi-Circuit (10-63A)

General Specifications

Maximum operating voltage: 250VAC / 400VDC.
Operating frequency: DC - 60Hz.
Hi-pot test voltage: L/N->PE: 3000Vdc 2s.
Climatic category: HPF (40/085/56).
(-40°C/+85°C/95% RH, 30d).
MTBF: > 0.3 Million Hours@40°C,230VAC
Flammability class: UL 94 V0.

Single Line, Pi Circuit

For Telecom, Military and Industrial application.
Compact size and easy to install.
High Current version is available.

Electrical schematics

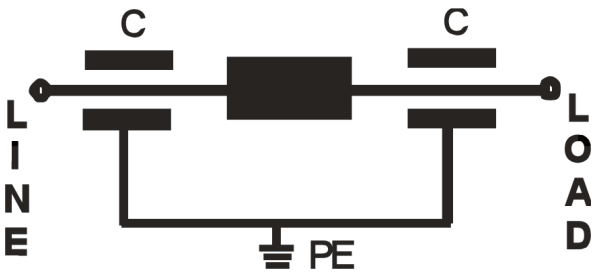

Product List

Type	Rated Current (A) @40°C	Rated Capacitance @1KHz, 25 °C	Leakage Current 250VAC/ 50Hz (mA)	Termination	Torque on S (Nm)	Mounting Thread	Weight (gr)
X-10290-014	10	2 x 10 nF	2.4	M3	0.5	M12 x 1	45
X-10290-015	16	2 x 22 nF	5.0	M4	1.2	M16 x 1	70
X-10290-016	32	2 x 47 nF	10.0	M4	1.2	M24 x 1	135
X-10290-017	63	2 x 470 nF	100	M6	2.5	M32 x 1.5	420

PIFT

Single Line Pi-Circuit (10-63A)

Mechanical dimensions (mm)

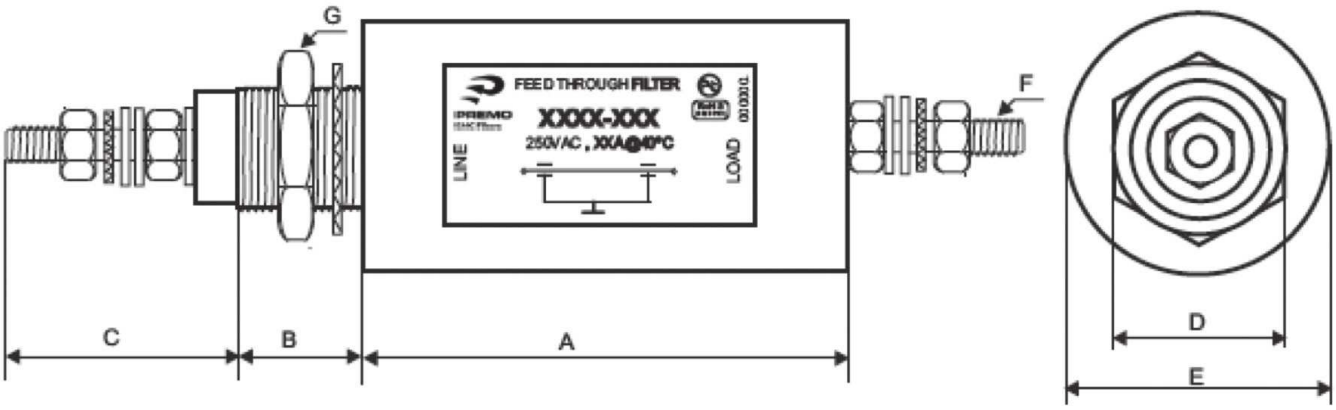

	10A	16A	32A	63A
A	66	69	101	118
B	12	14	14	19
C	16	18	18	26
D	17	22	22	41
E	20	25	25	54
F	M3	M4	M4	M6
G	M12 x 1	M16 x 1	M16 x 1	M32 x 1.5

Installation Guide

- The torque applied to the screw cannot exceed max level.
- Filter metal housing must be well connected to cabinet panel by electrically and make good grounding.
- The input & output wires should be separated to avoid noise coupling.
- Input wire of filter connection should be short and it will help to minimize radiated interferences.
- Make good insulation around the connection part to avoid short circuit.
- Further information, please contact PREMO Technical person.

PIFT

Single Line Pi-Circuit (10-63A)

Insertion Loss

10A

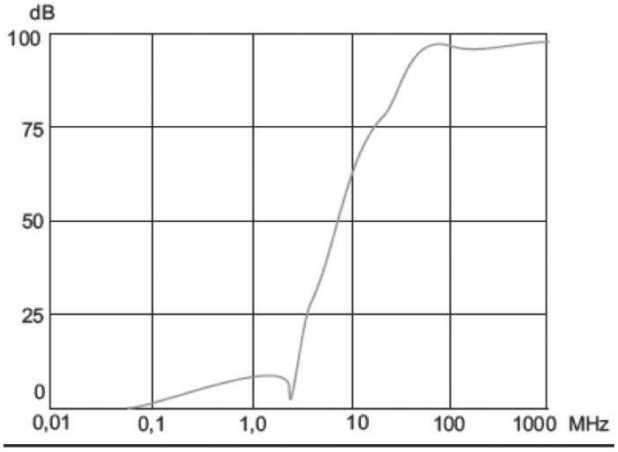

16A

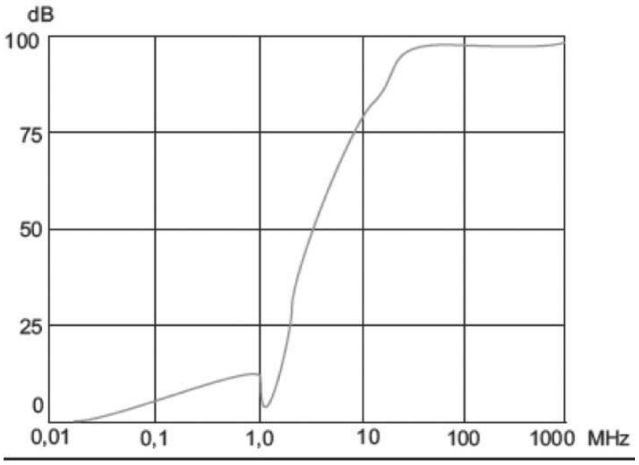

32A

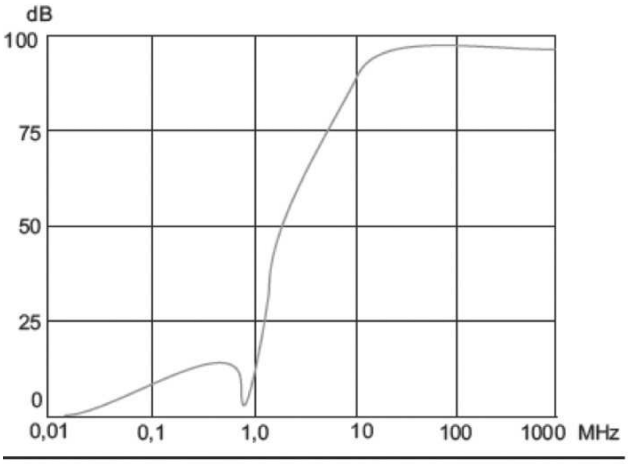

63A

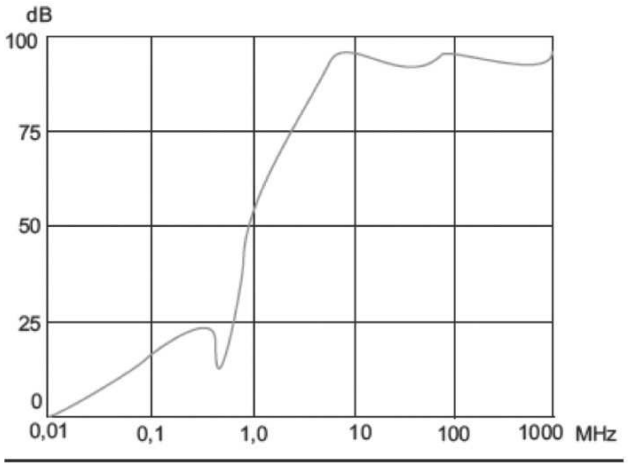

HOUSING

Mechanical dimensions

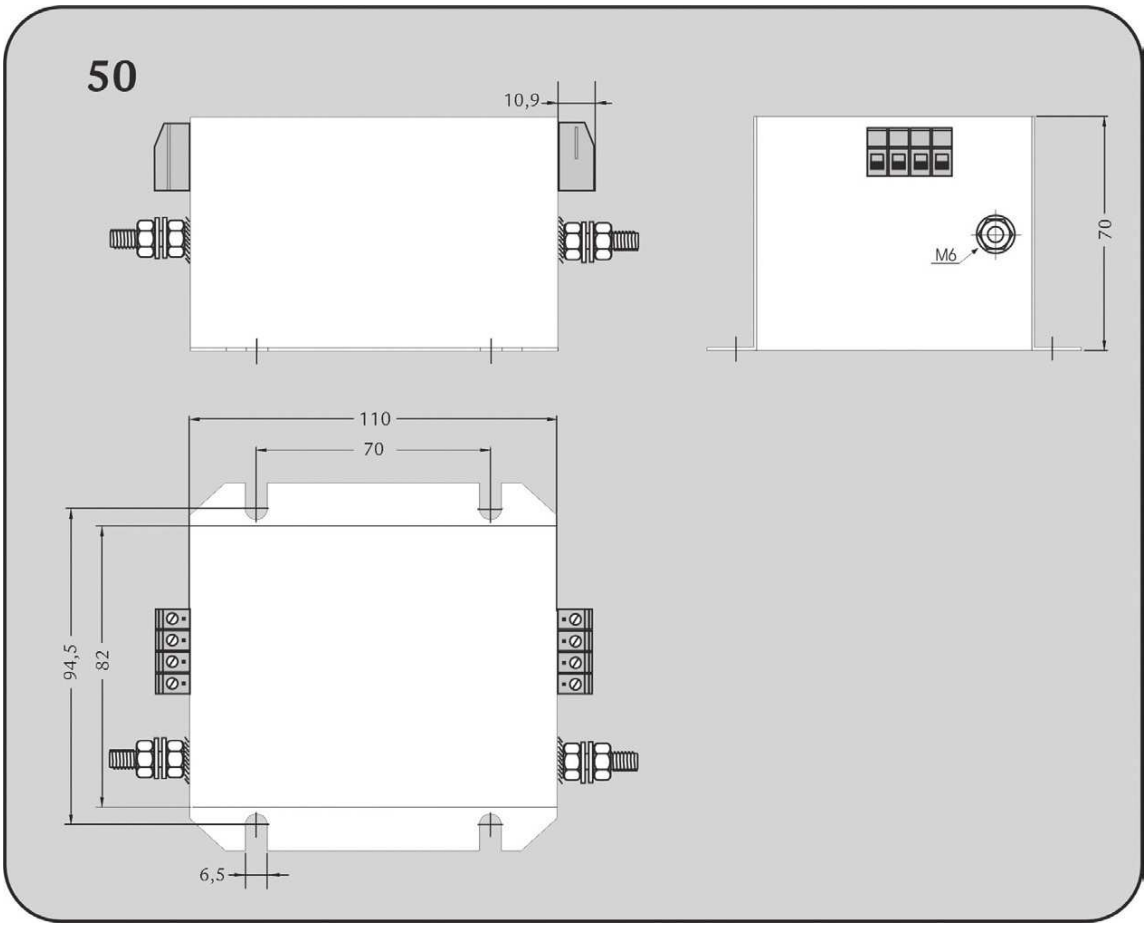

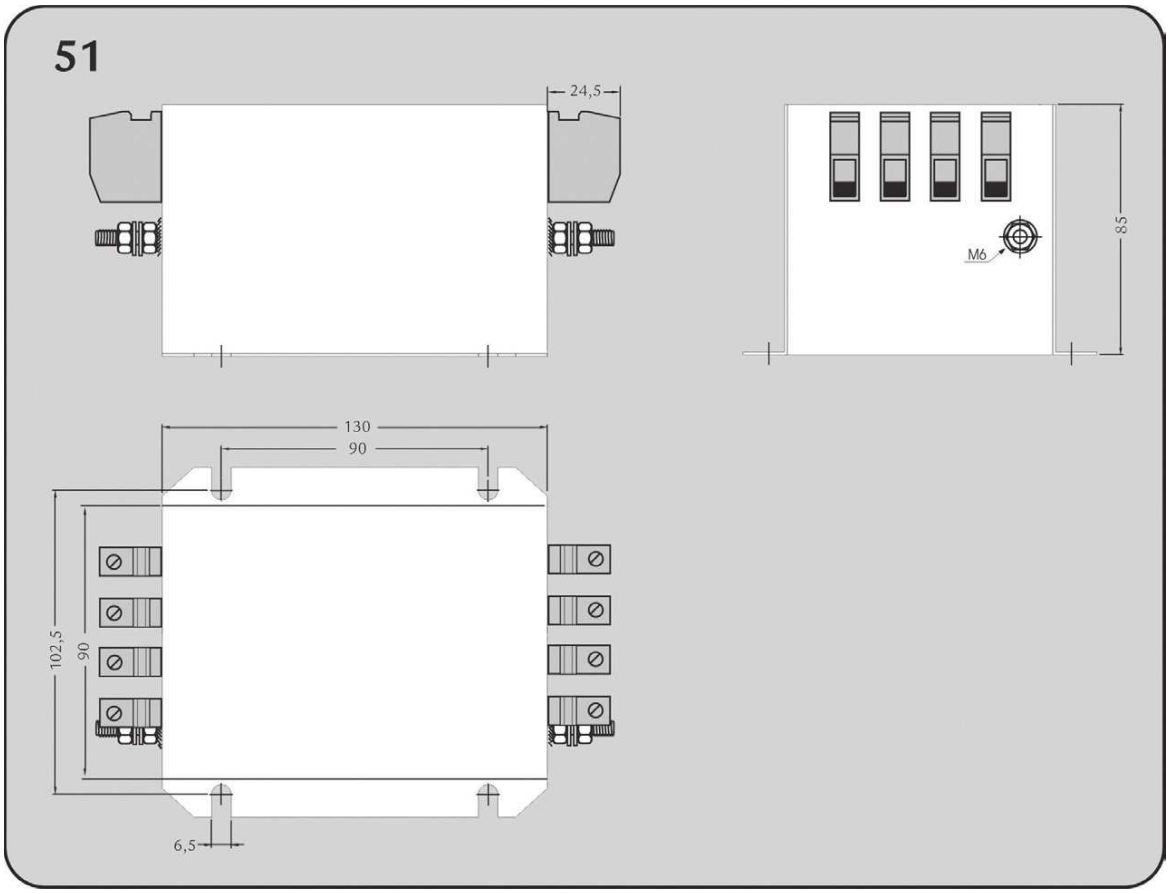

HOUSING

Mechanical dimensions

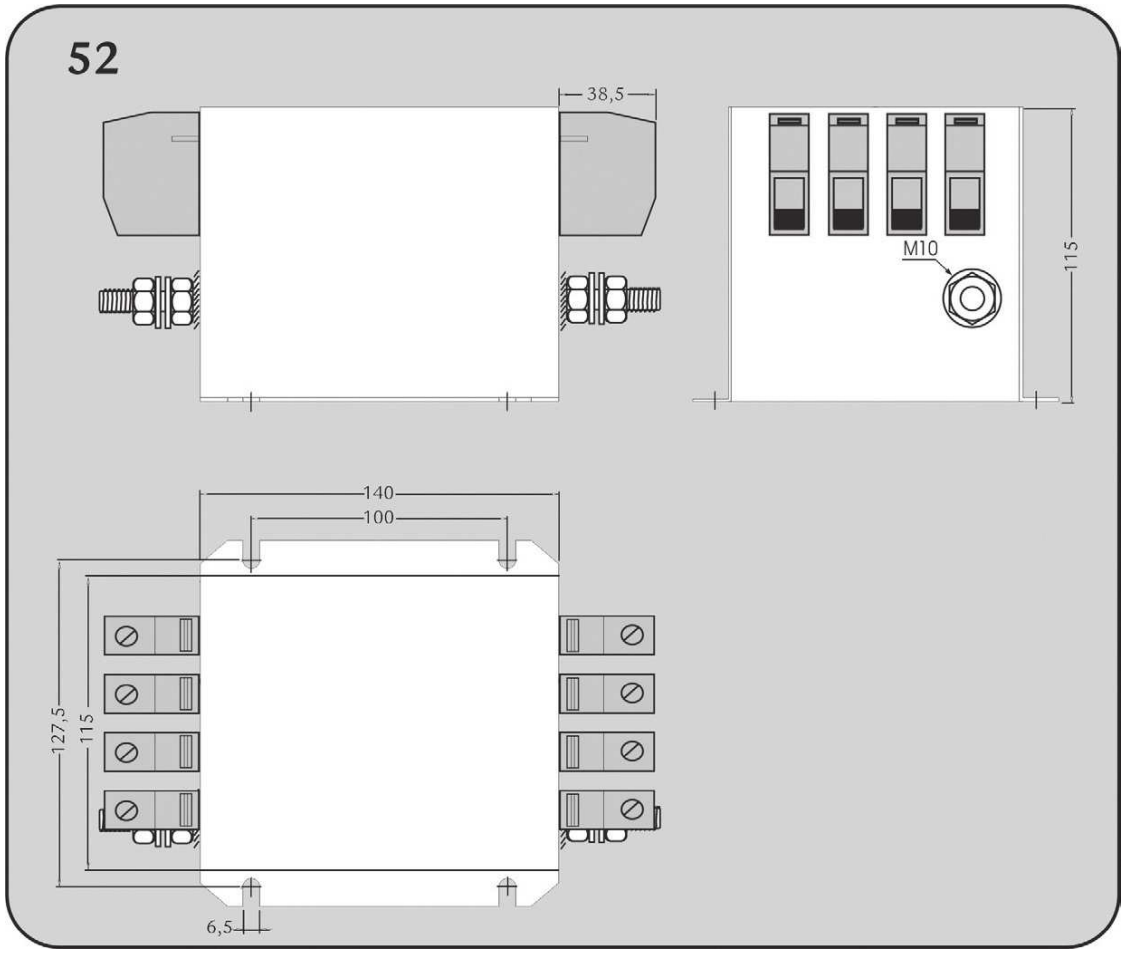

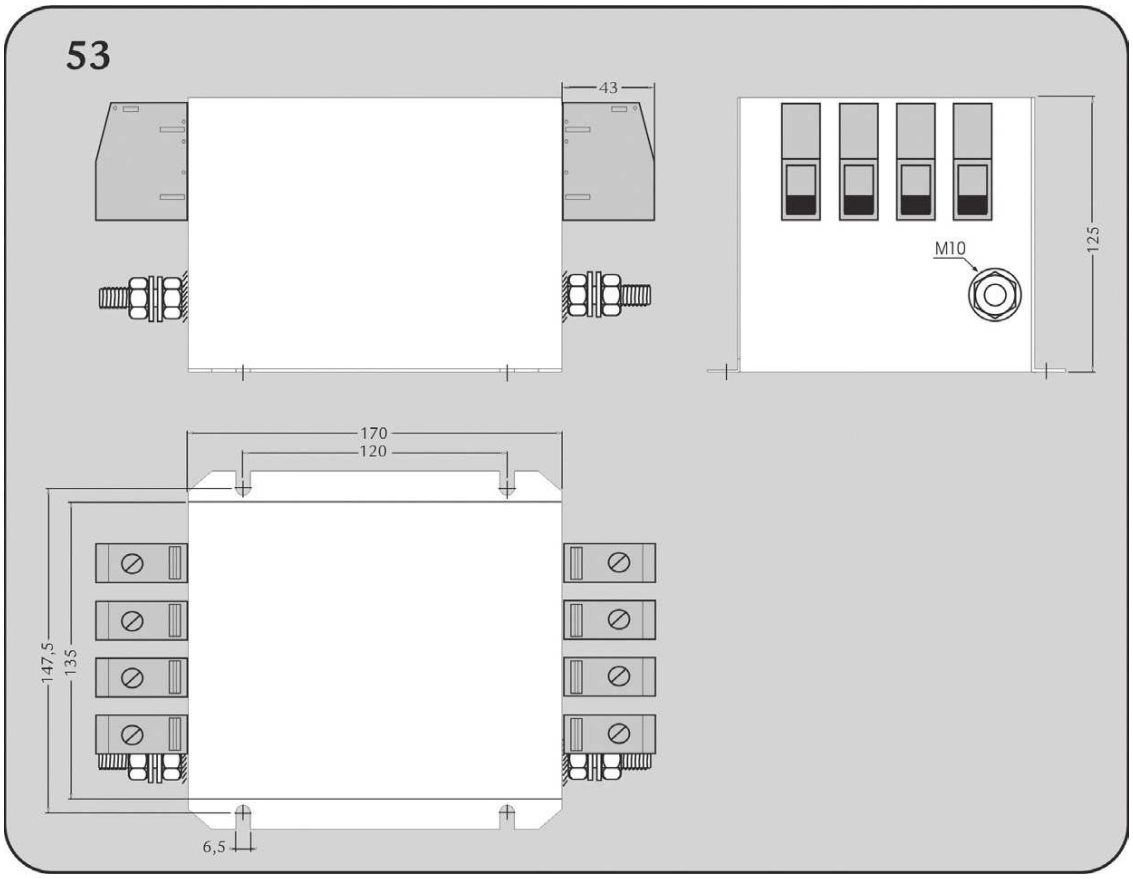

HOUSING

Mechanical dimensions

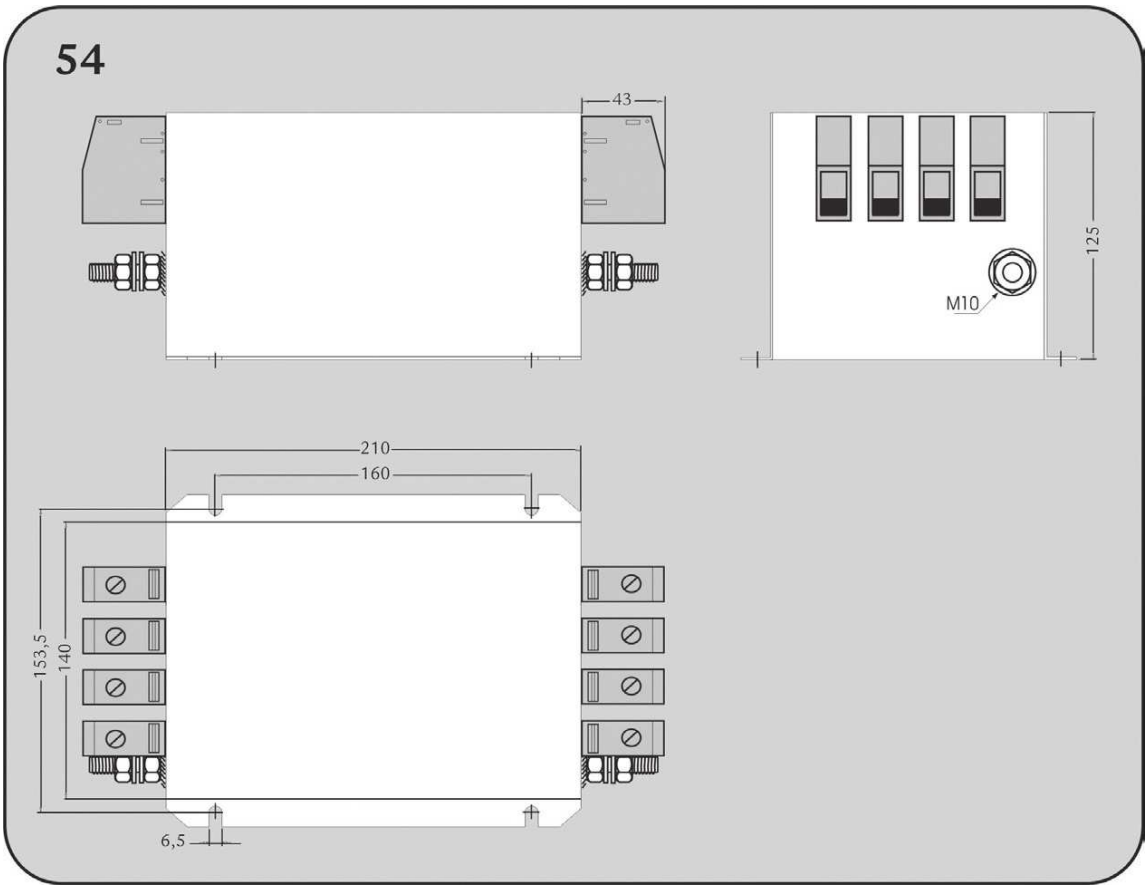

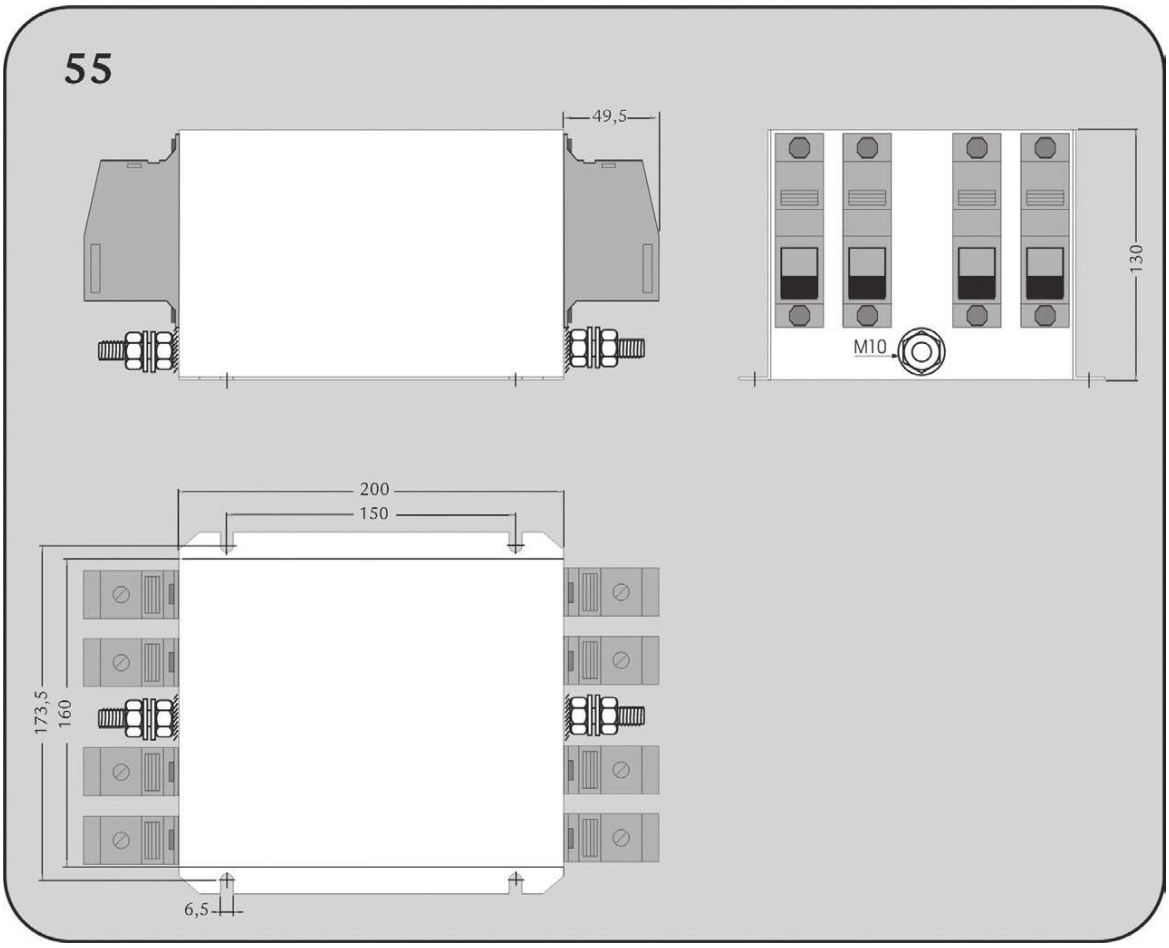

HOUSING

Mechanical dimensions

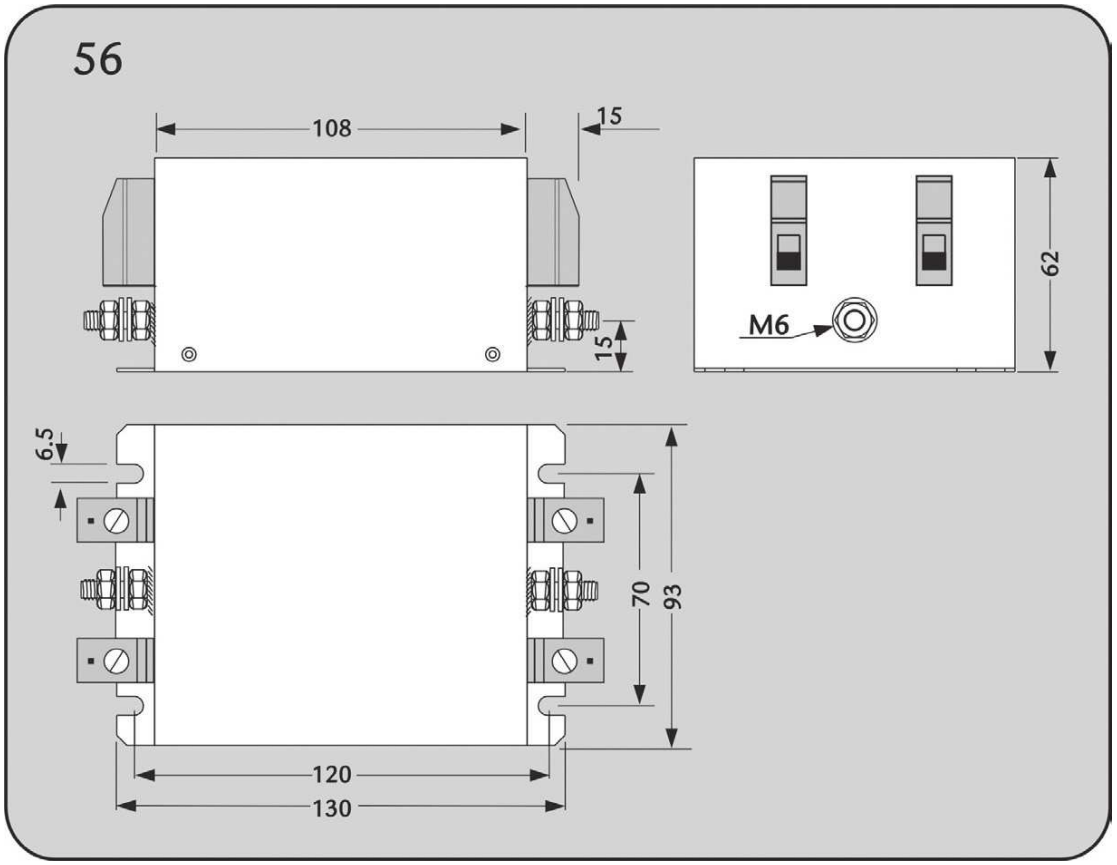

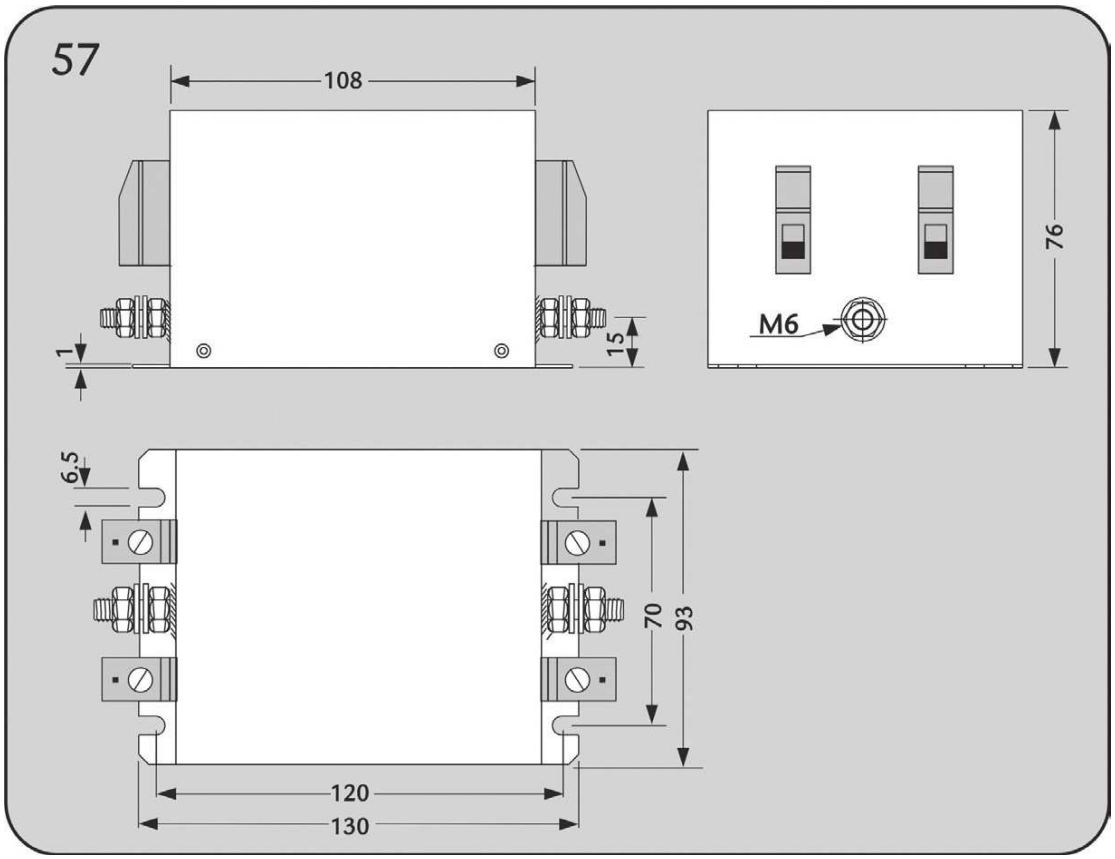

HOUSING

Mechanical dimensions

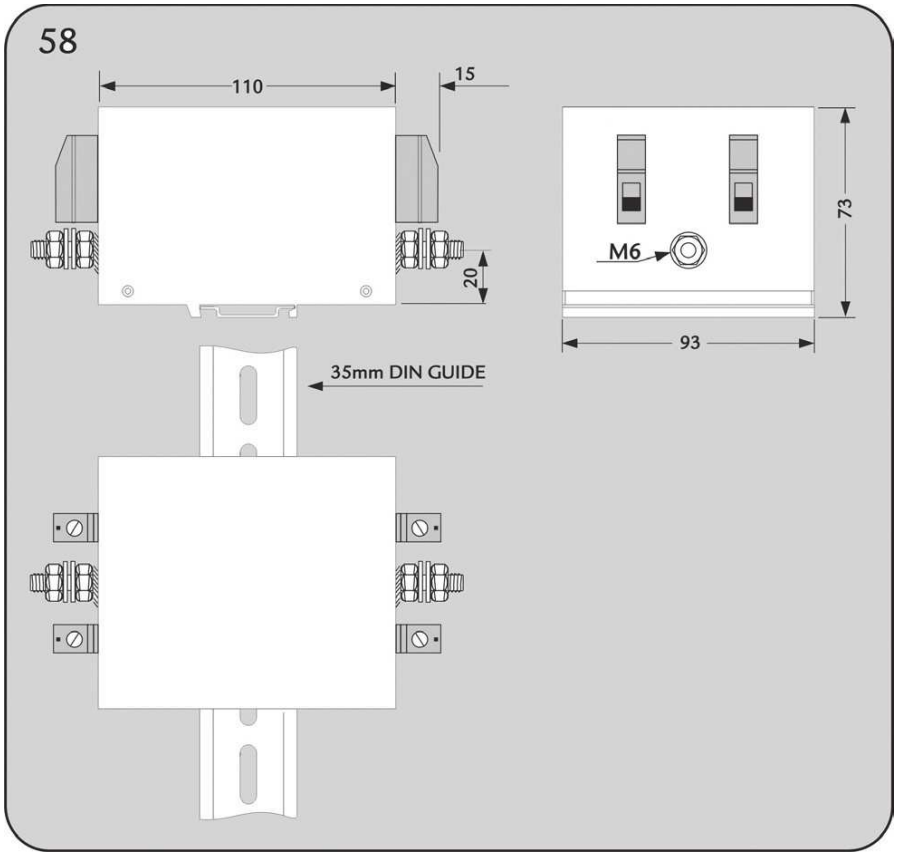

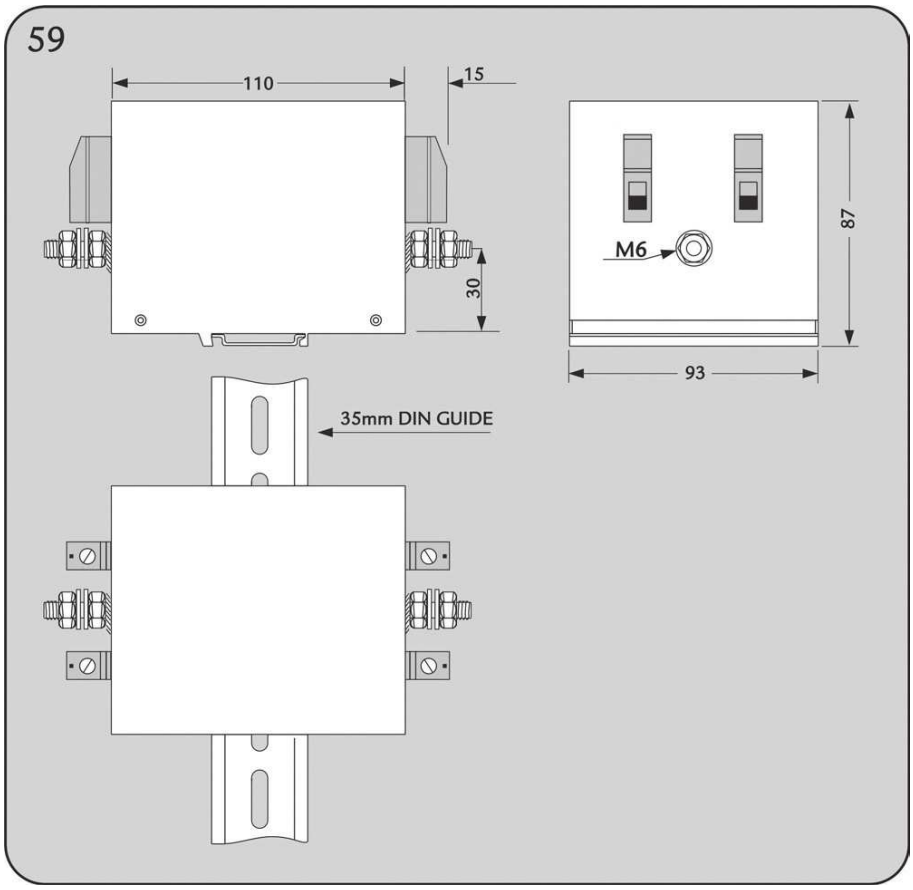

HOUSING

Mechanical dimensions

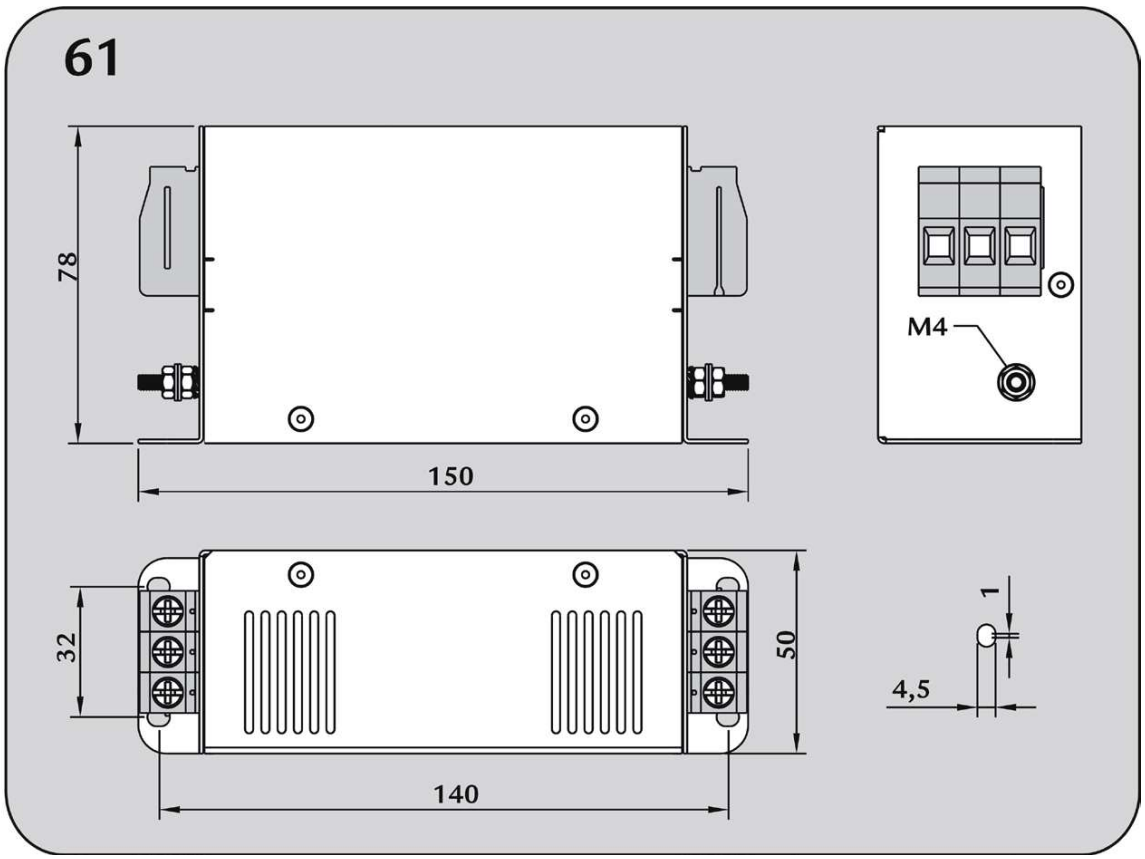

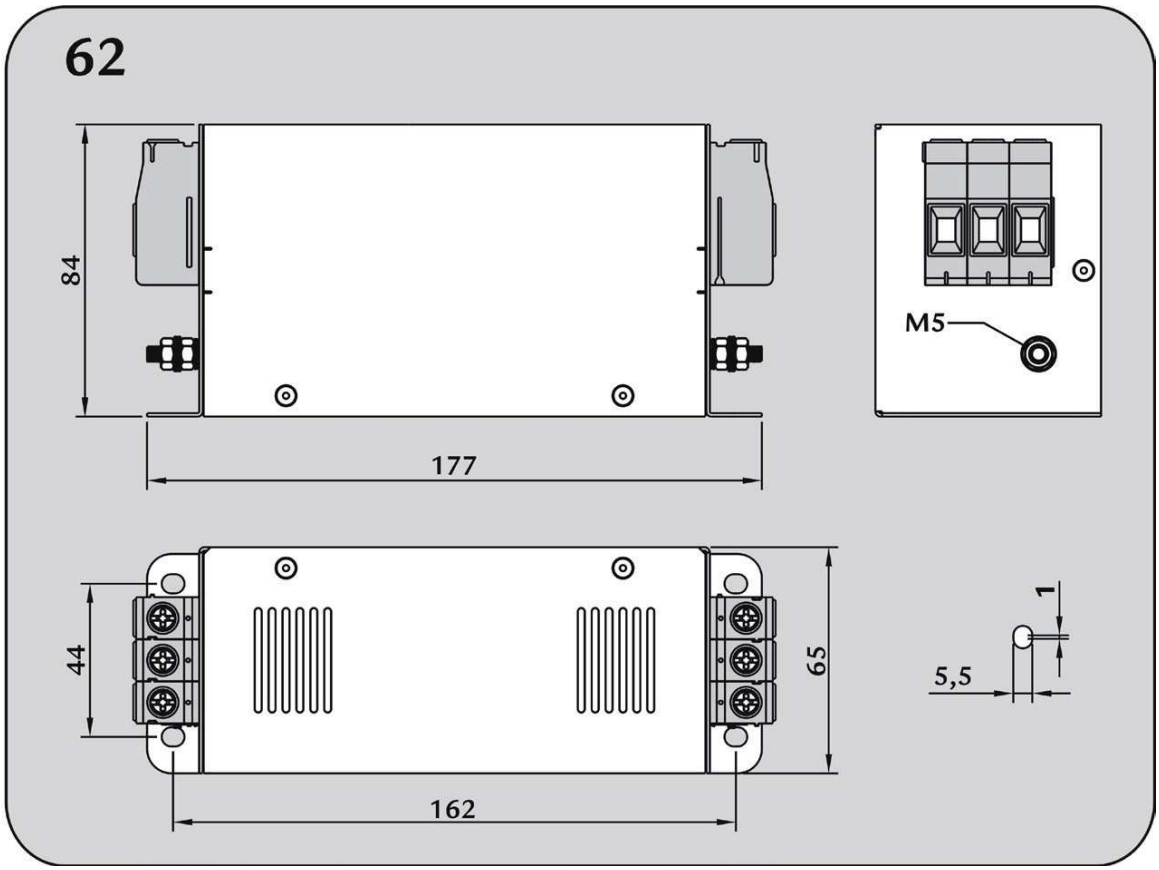

HOUSING

Mechanical dimensions

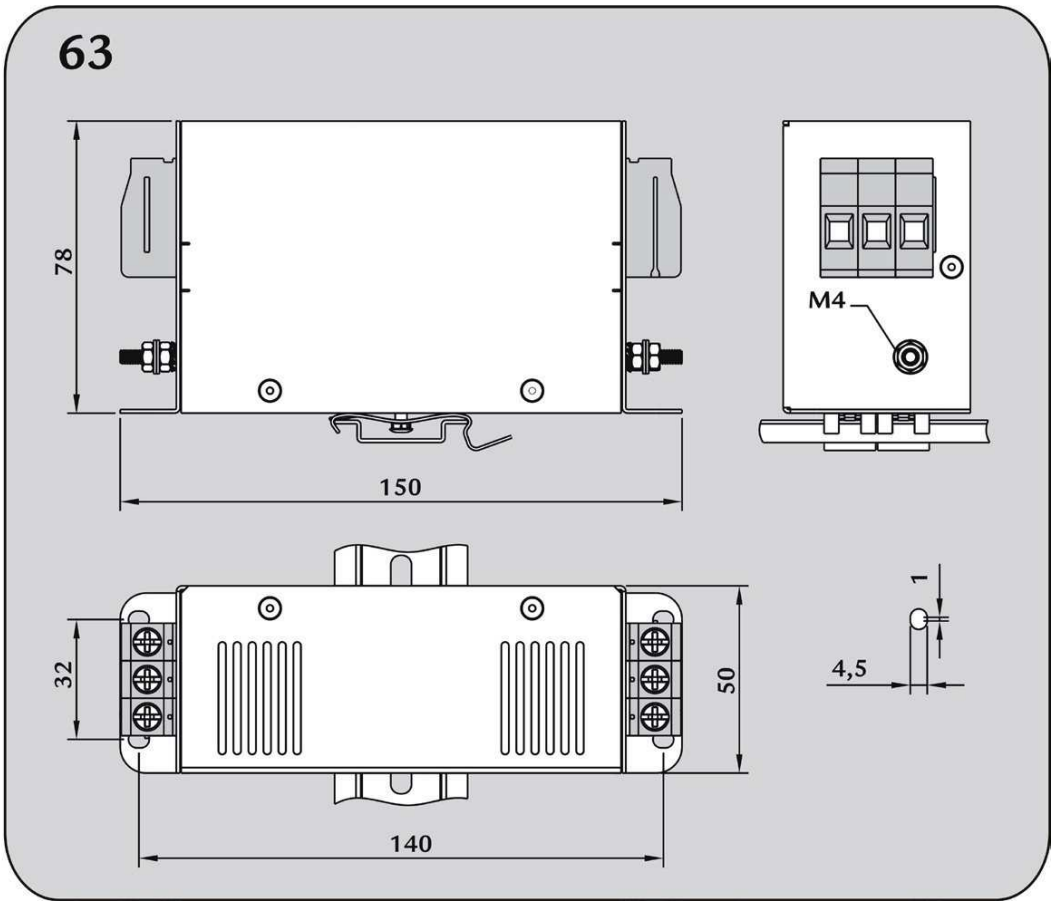

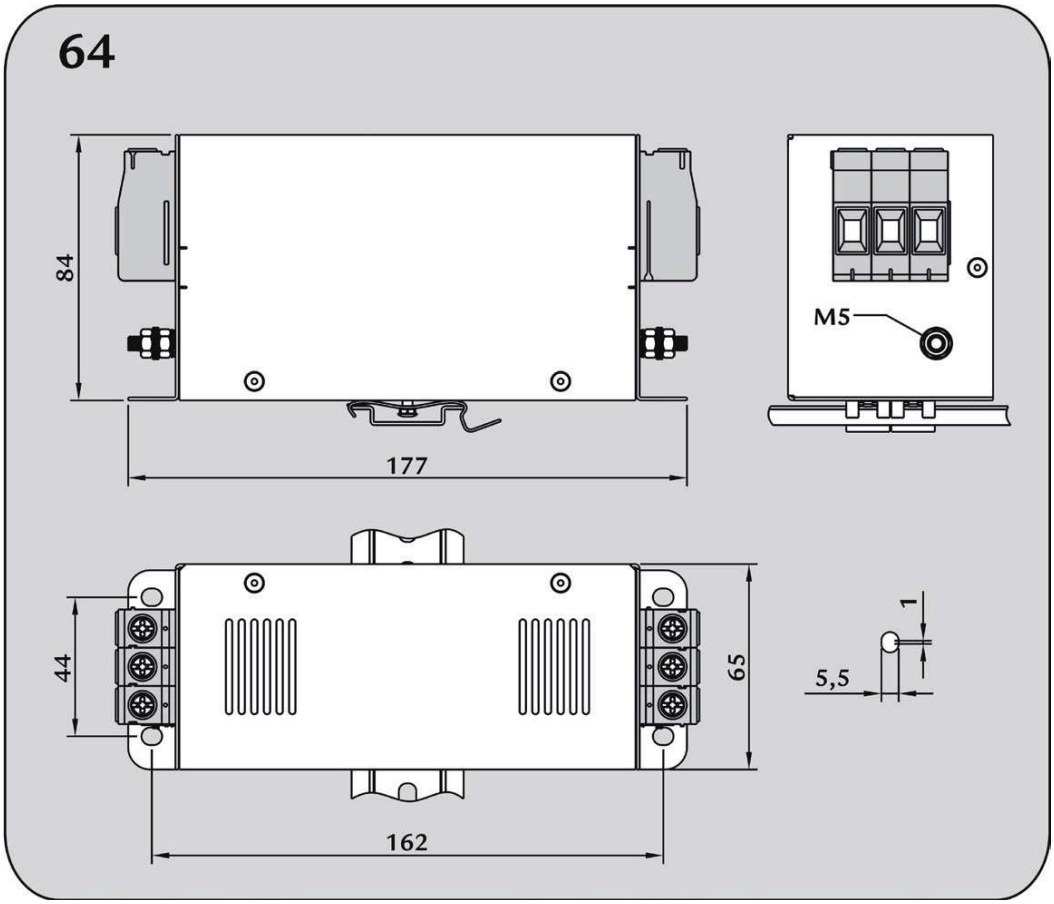

HOUSING

Mechanical dimensions

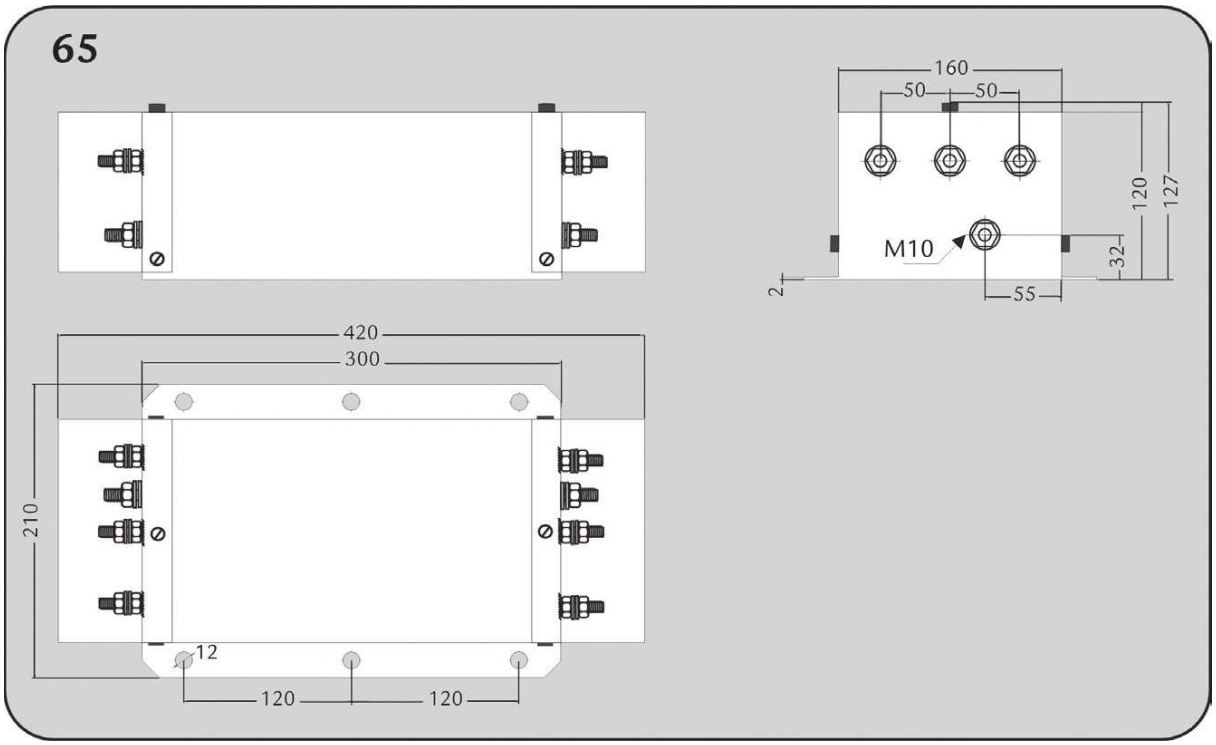

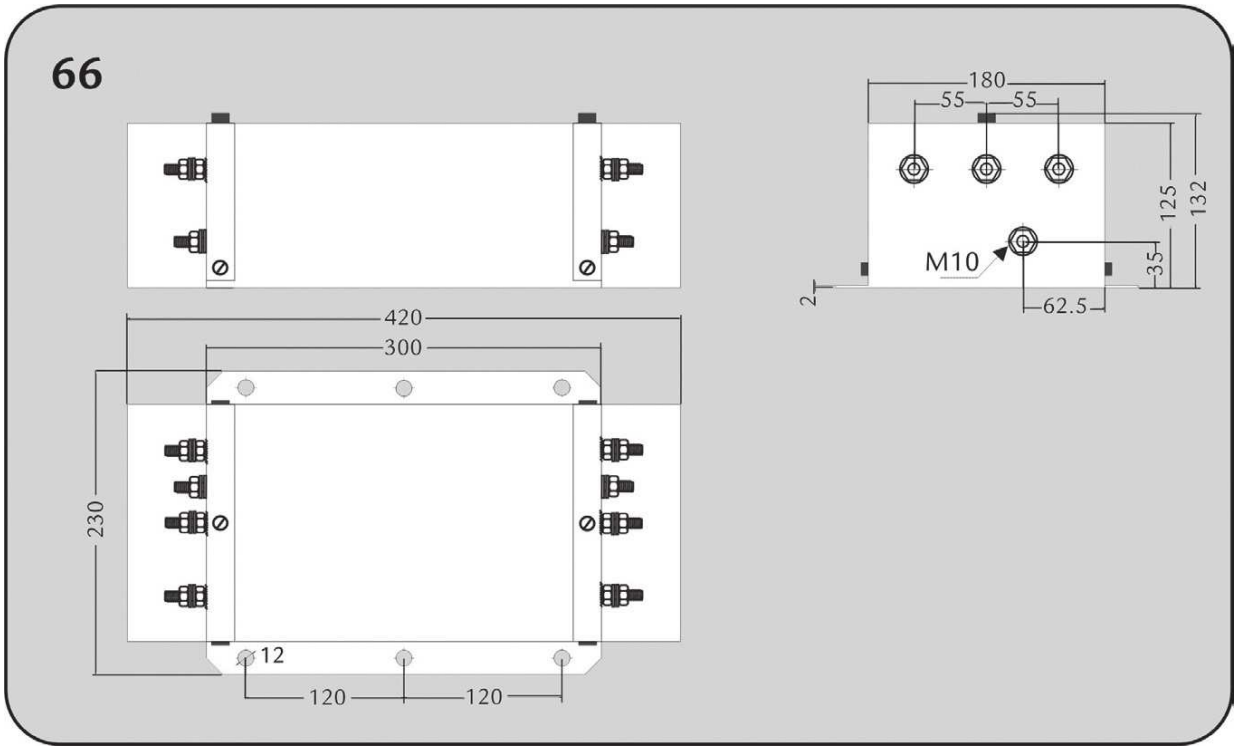

HOUSING

Mechanical dimensions

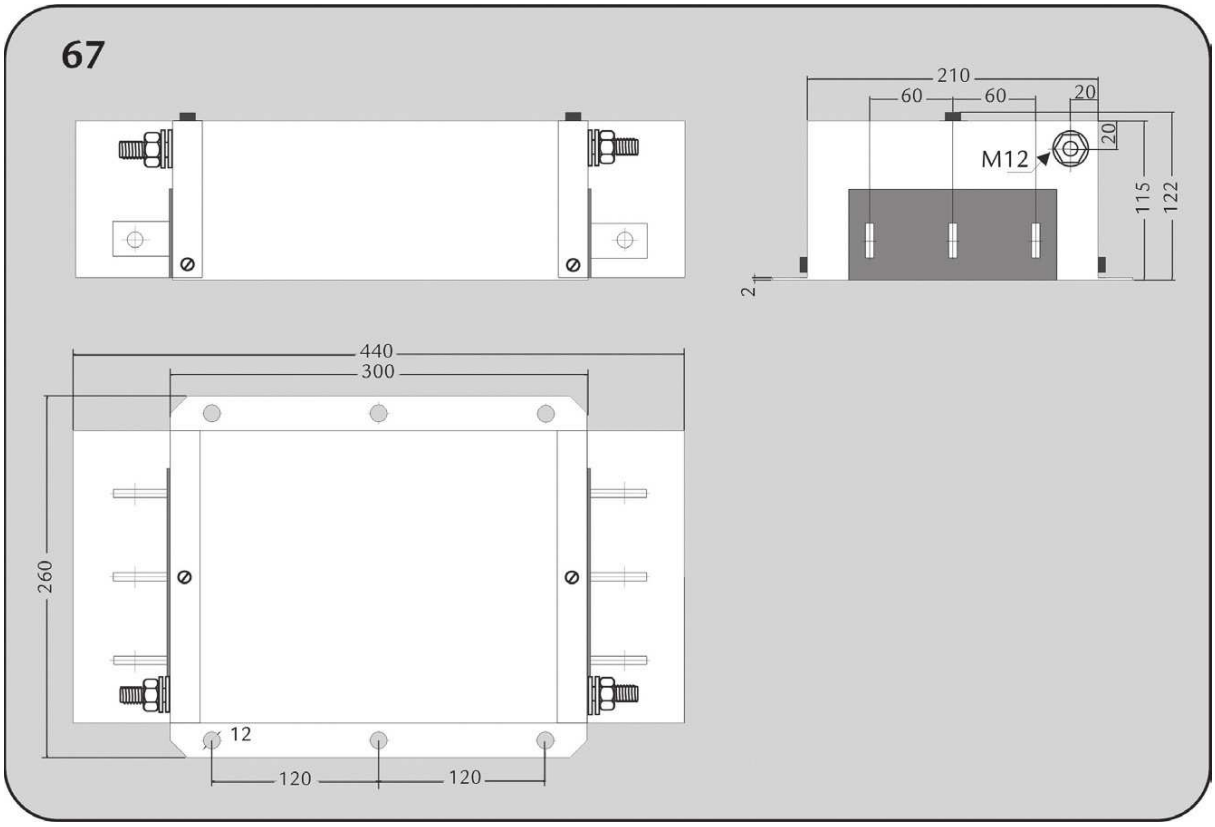

HOUSING

Mechanical dimensions

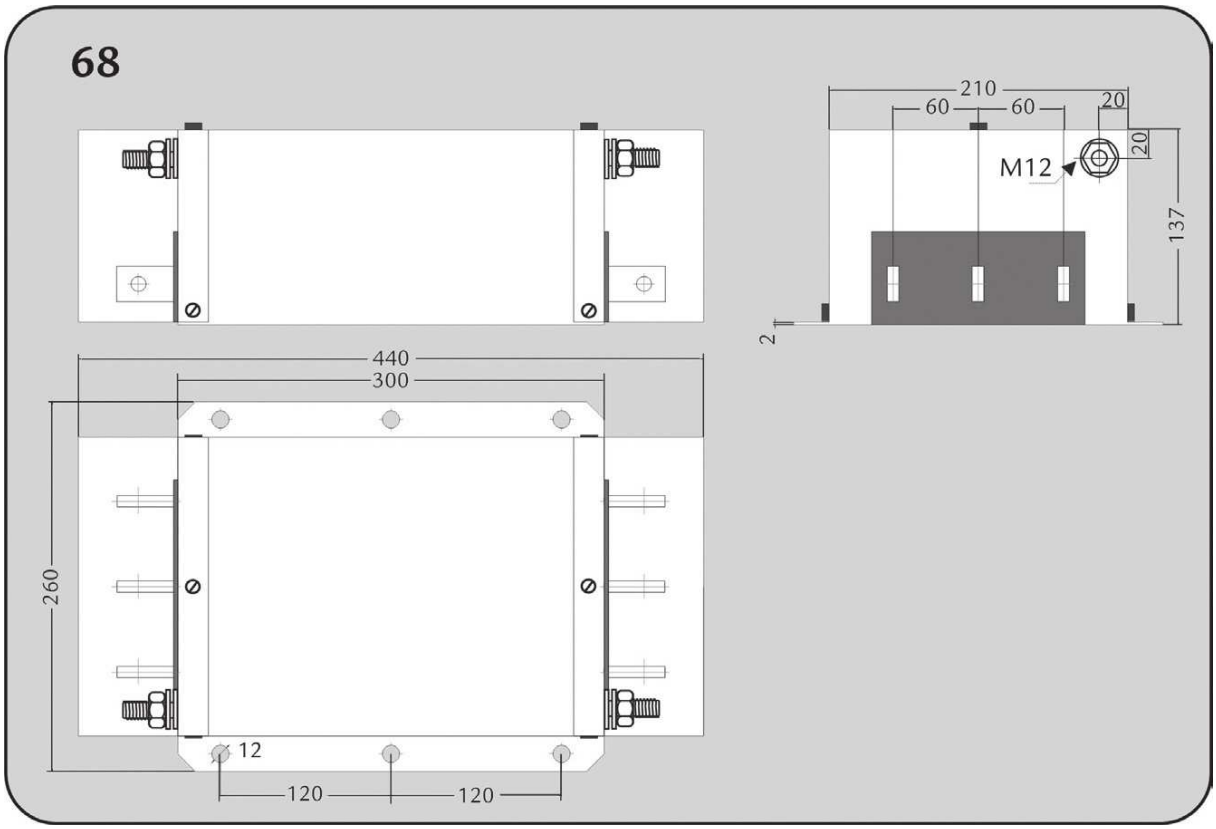

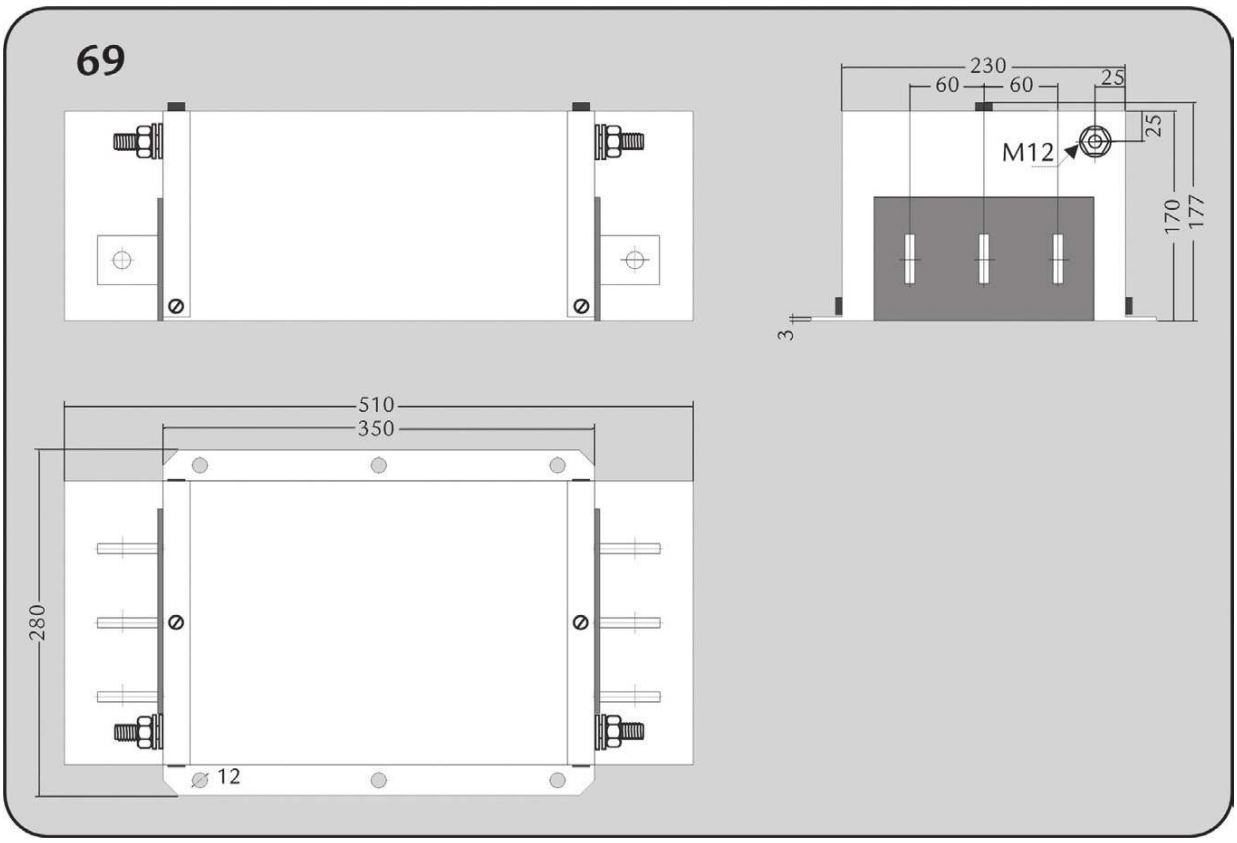

HOUSING

Mechanical dimensions

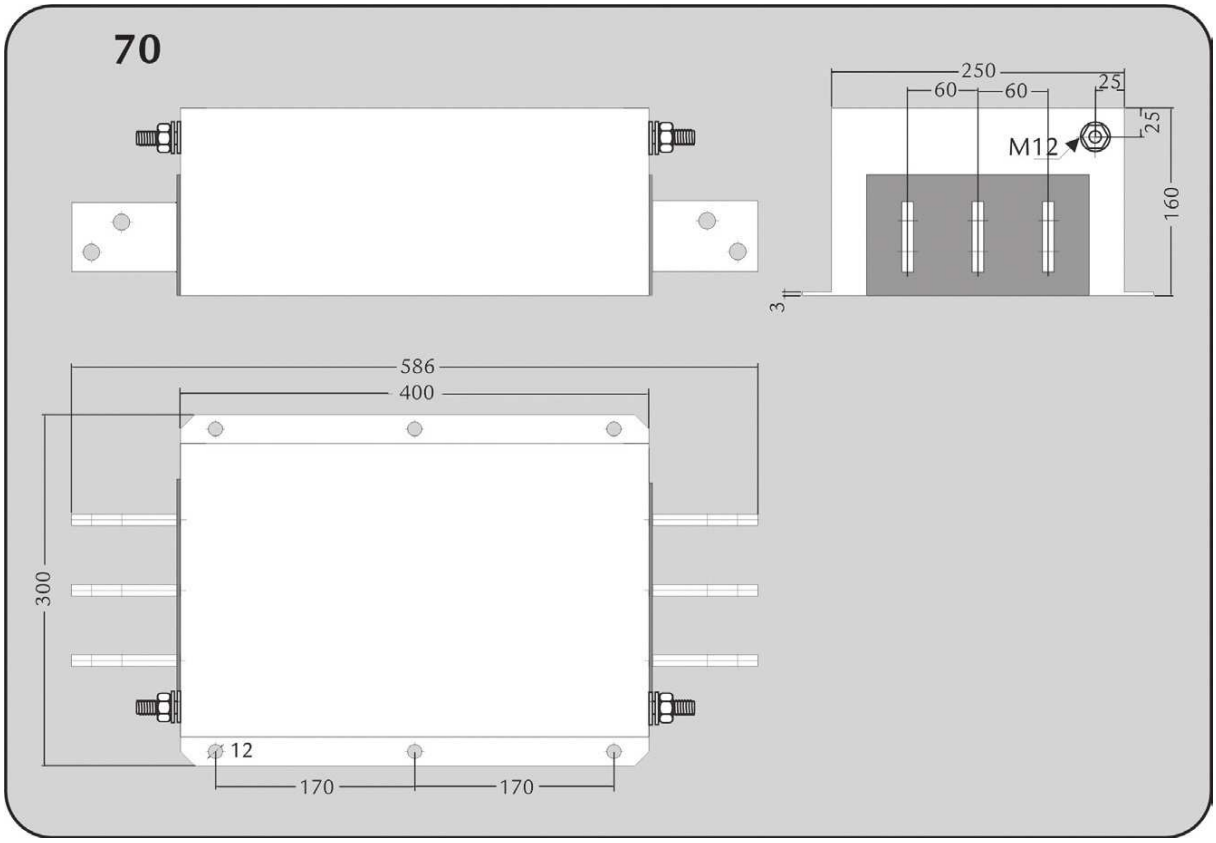

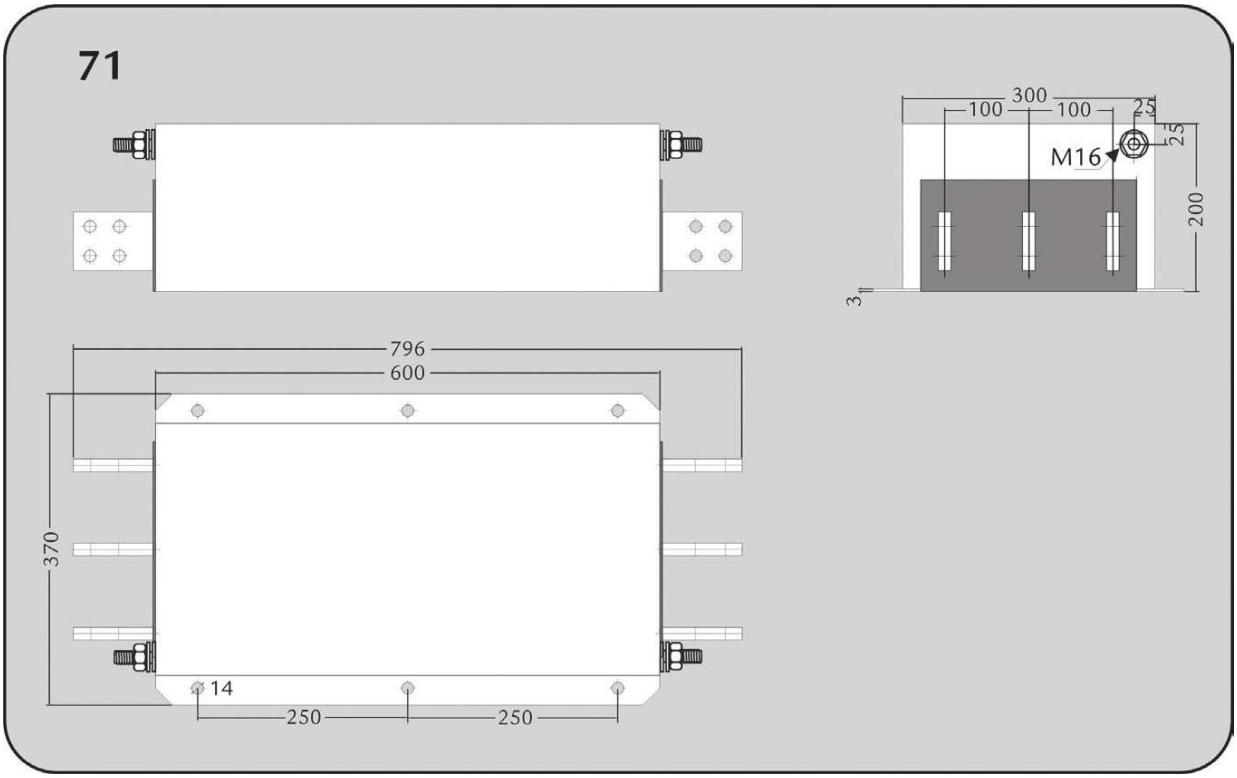

HOUSING

Mechanical dimensions

201

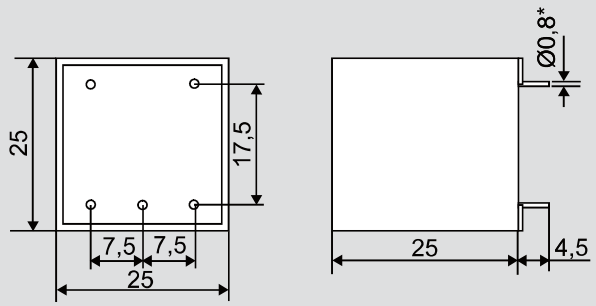

202

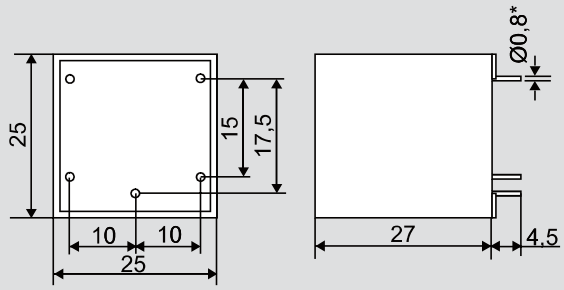

203

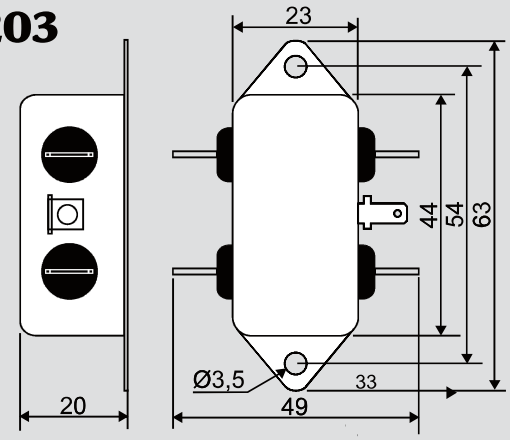

Ø4 for FAY series

204

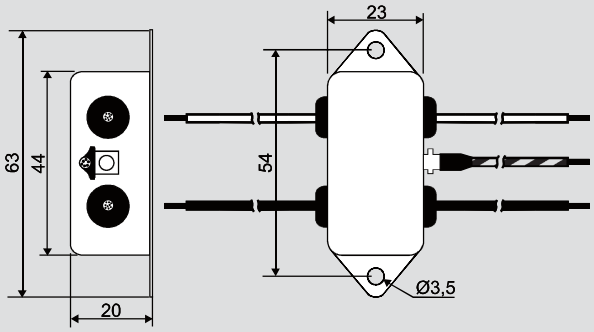

Wire Length 200 mm.

205

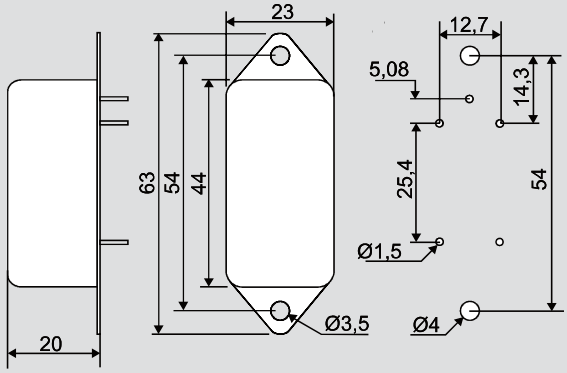

206

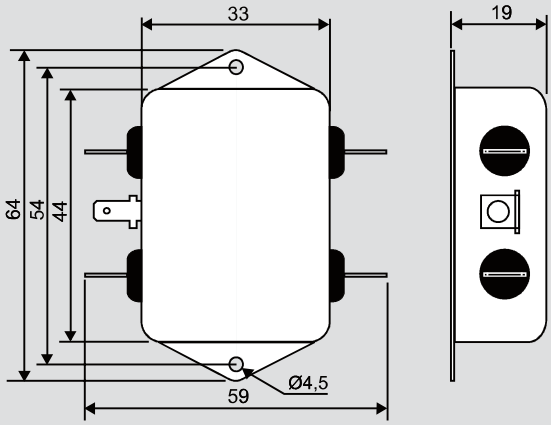

HOUSING

Mechanical dimensions

207

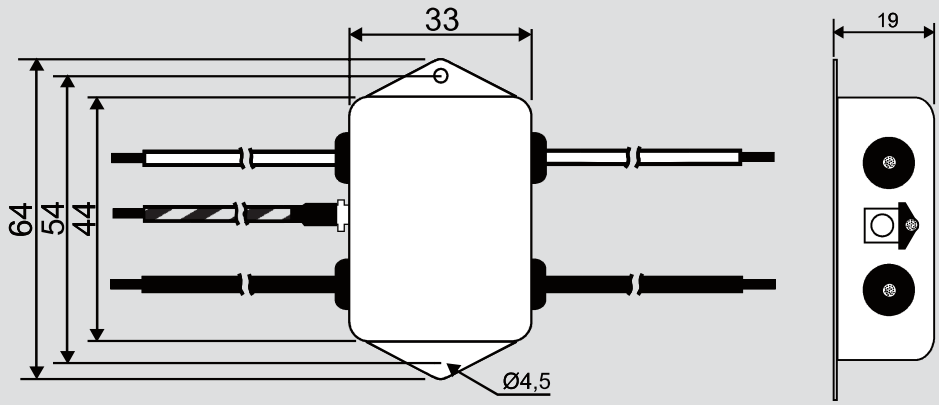

Wire Length 200 mm.

208

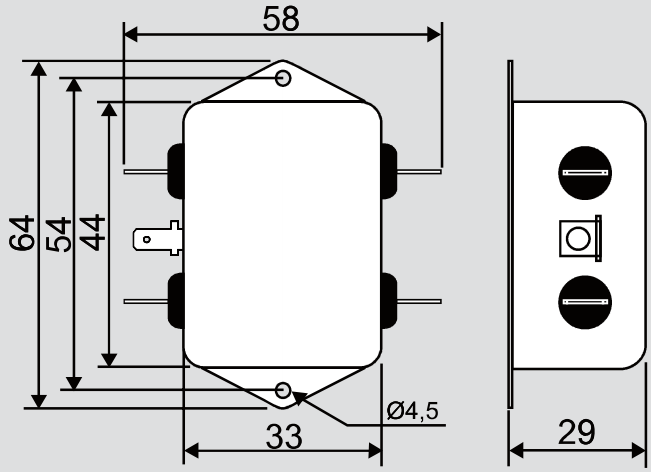

209

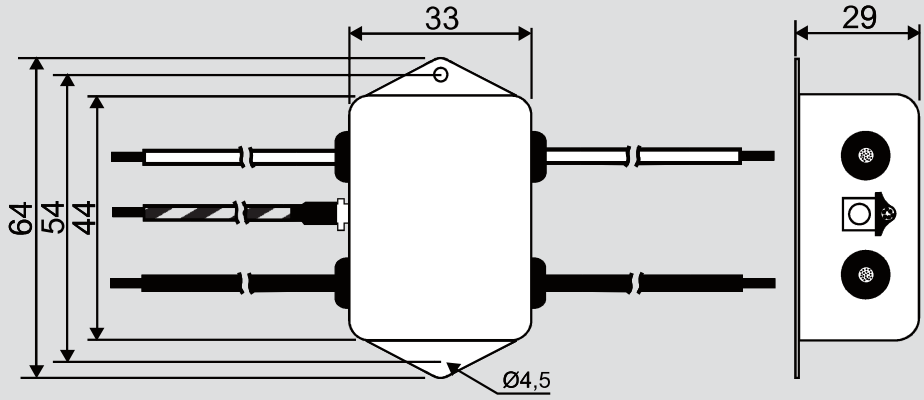

Wire Length 200 mm.

HOUSING

Mechanical dimensions

210

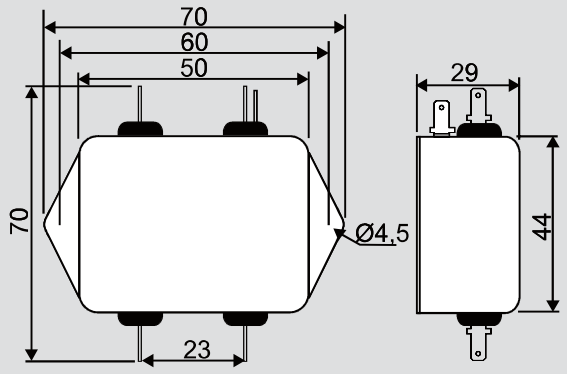

211

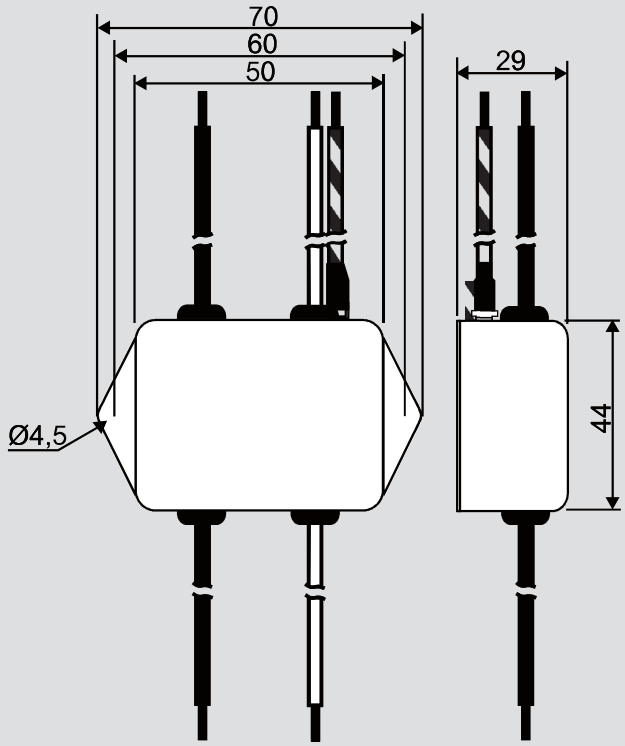

Wire Length 200 mm.

212

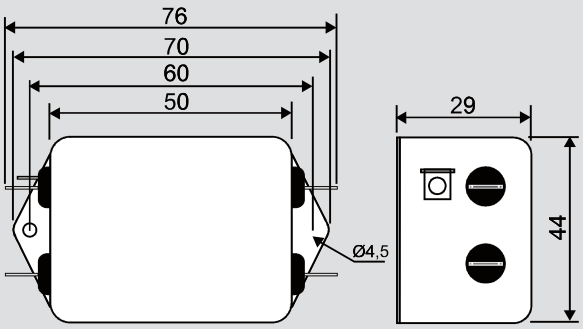

213

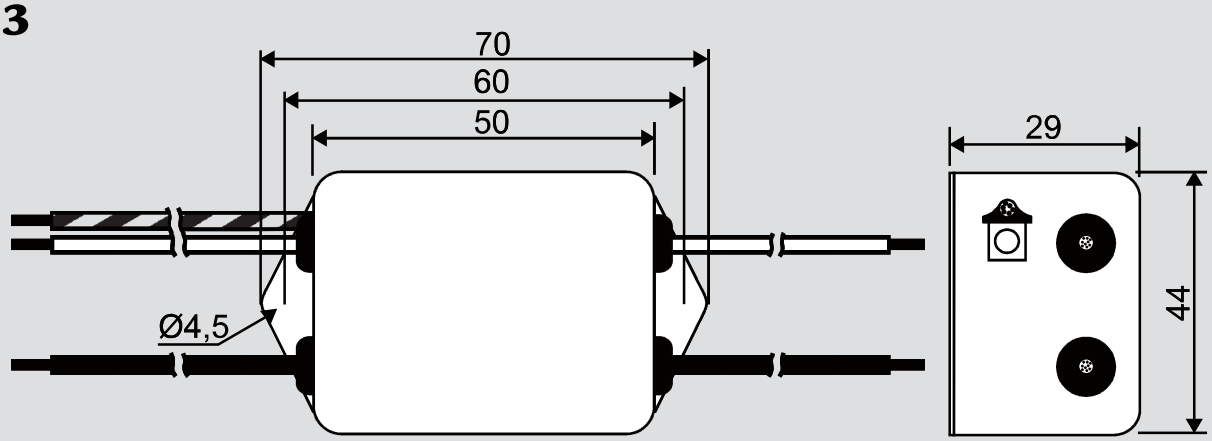

Wire Length 200 mm.

HOUSING

Mechanical dimensions

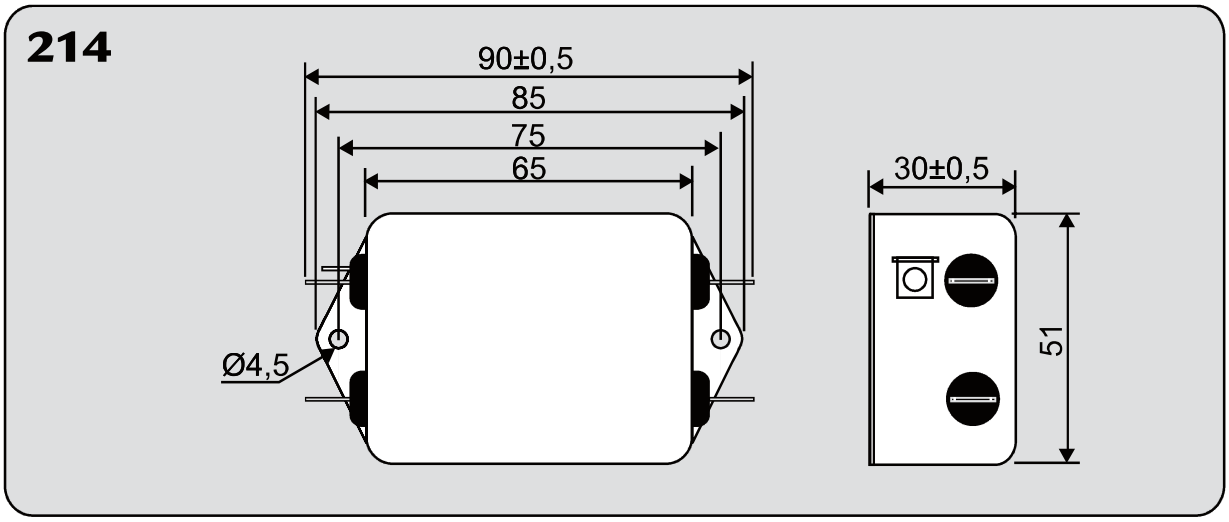

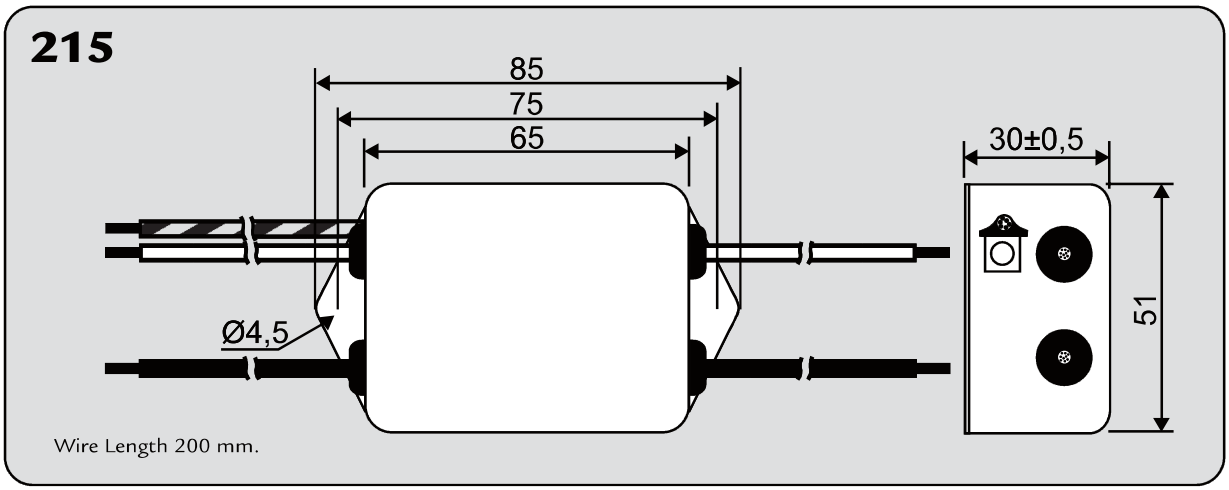

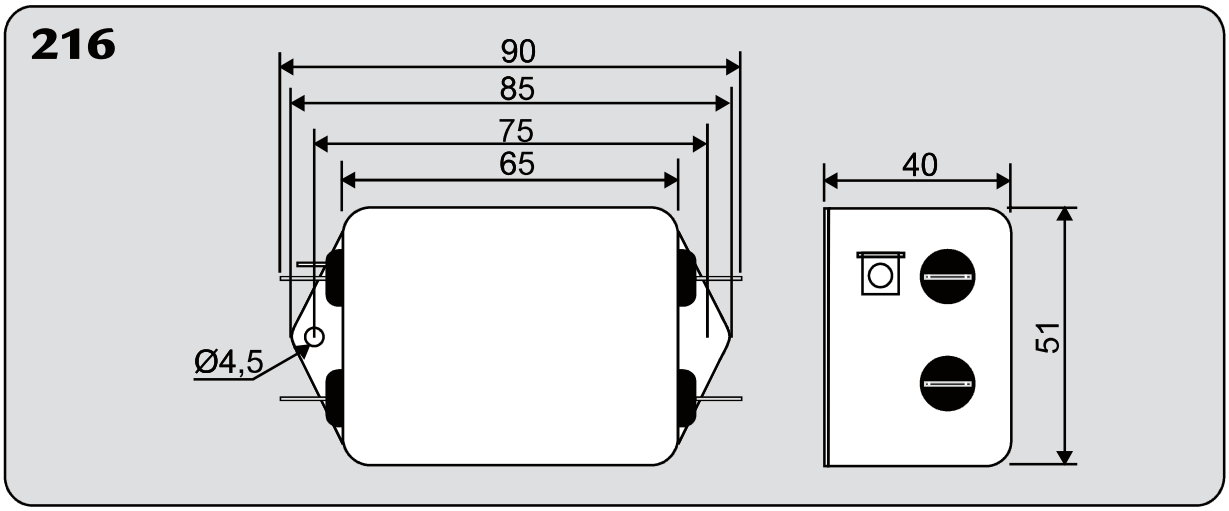

HOUSING

Mechanical dimensions

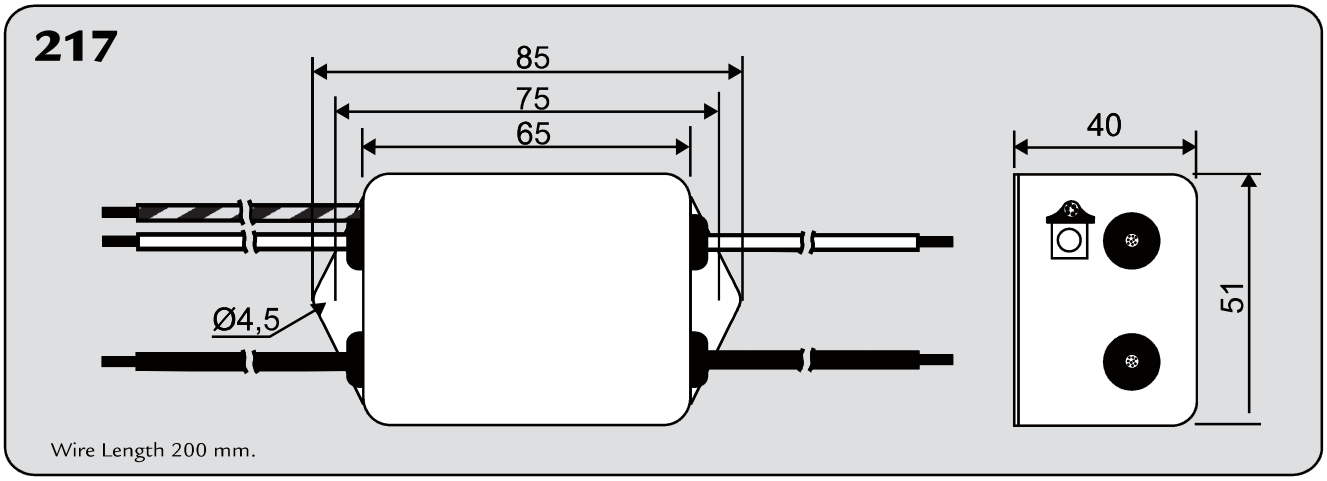

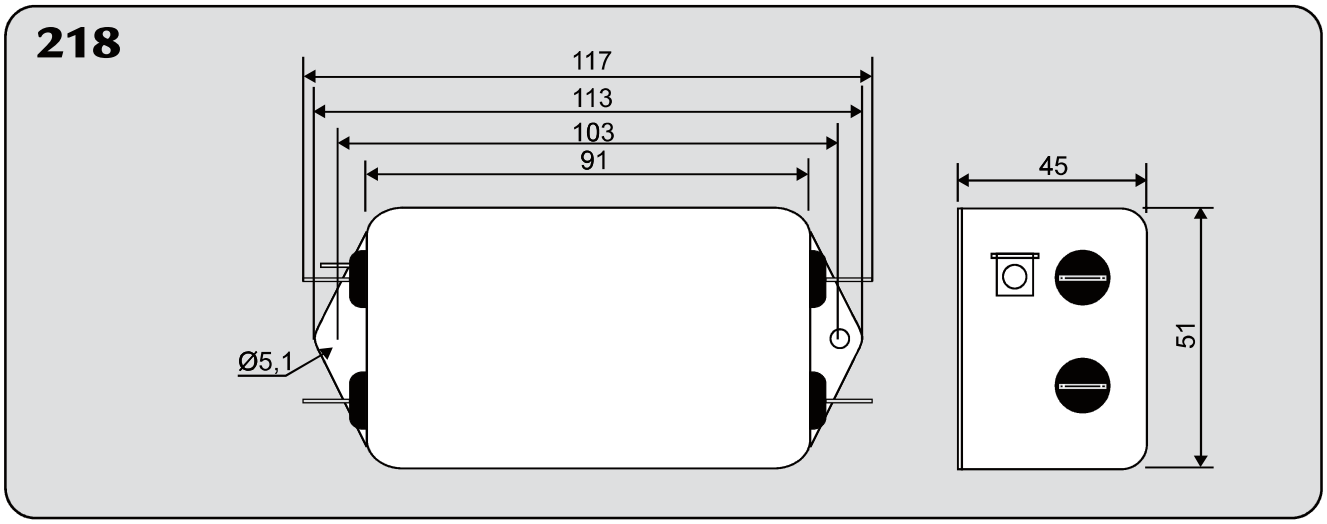

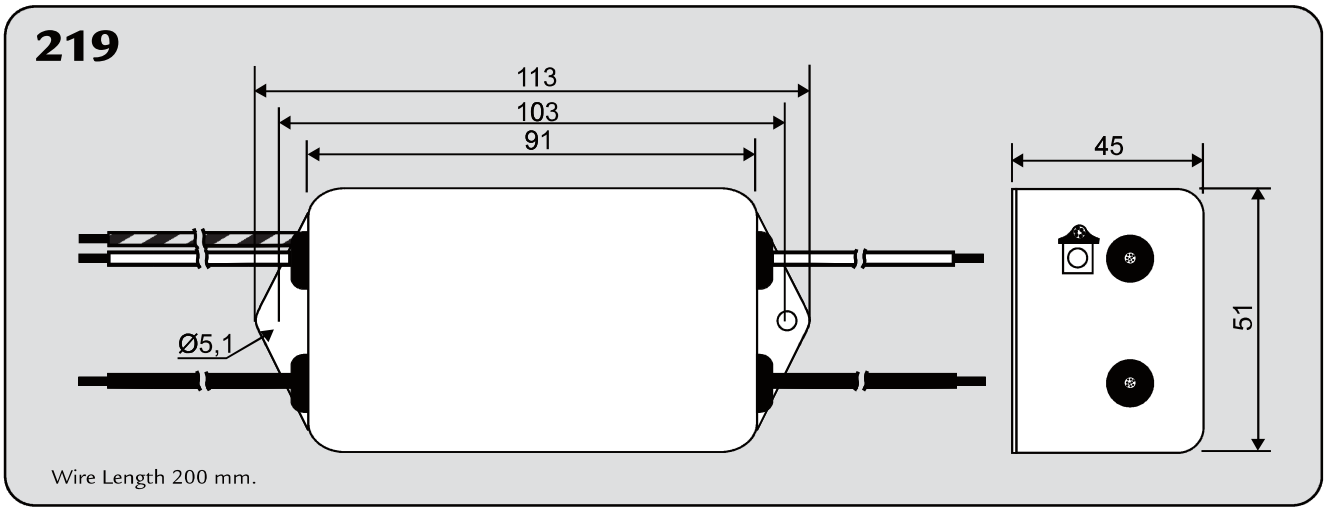

HOUSING

Mechanical dimensions

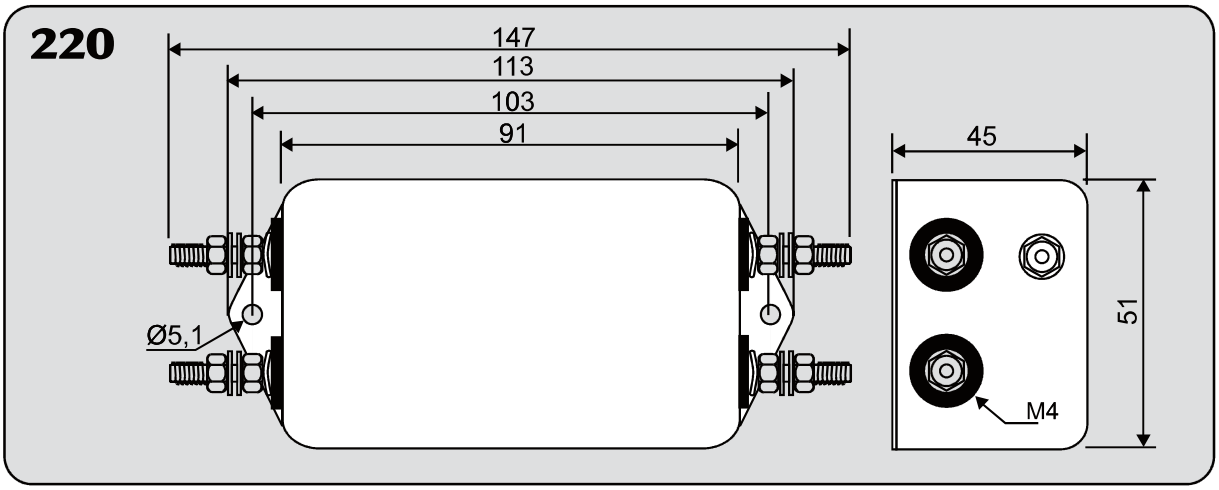

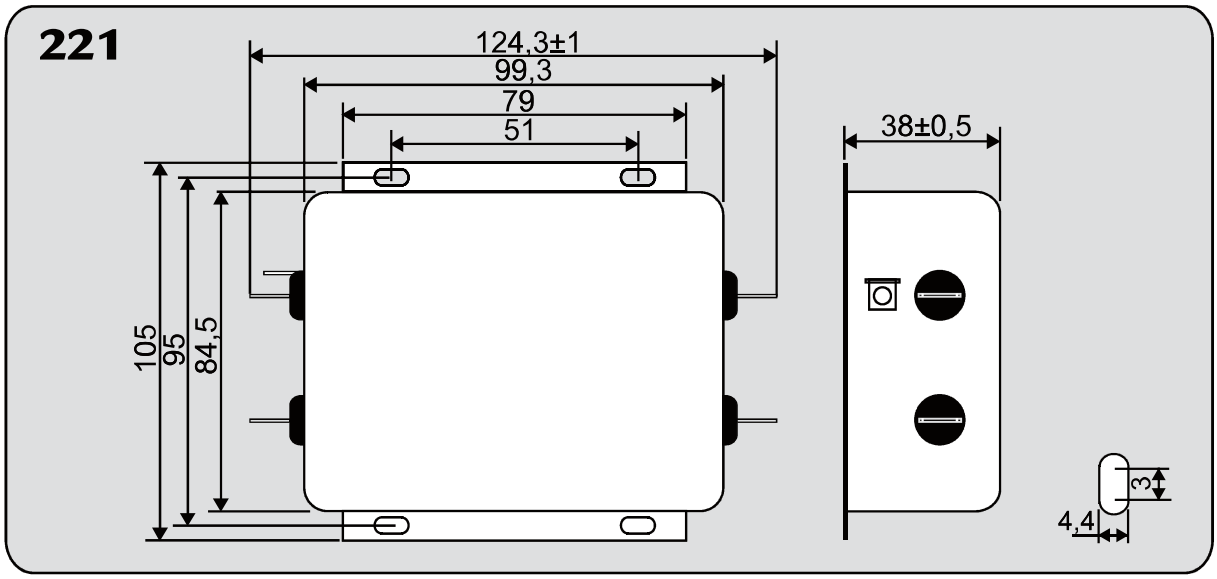

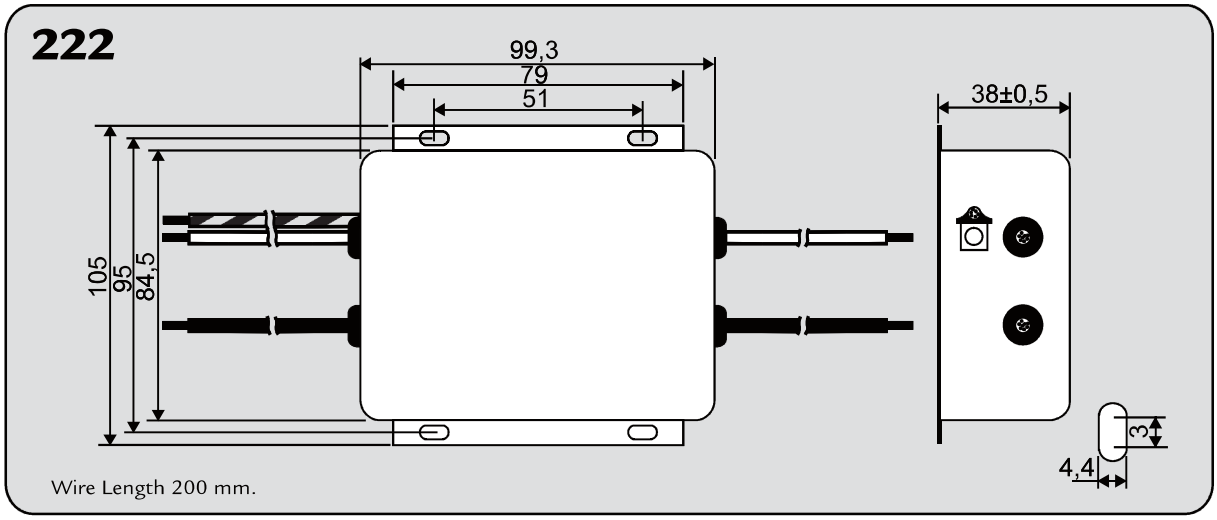

HOUSING

Mechanical dimensions

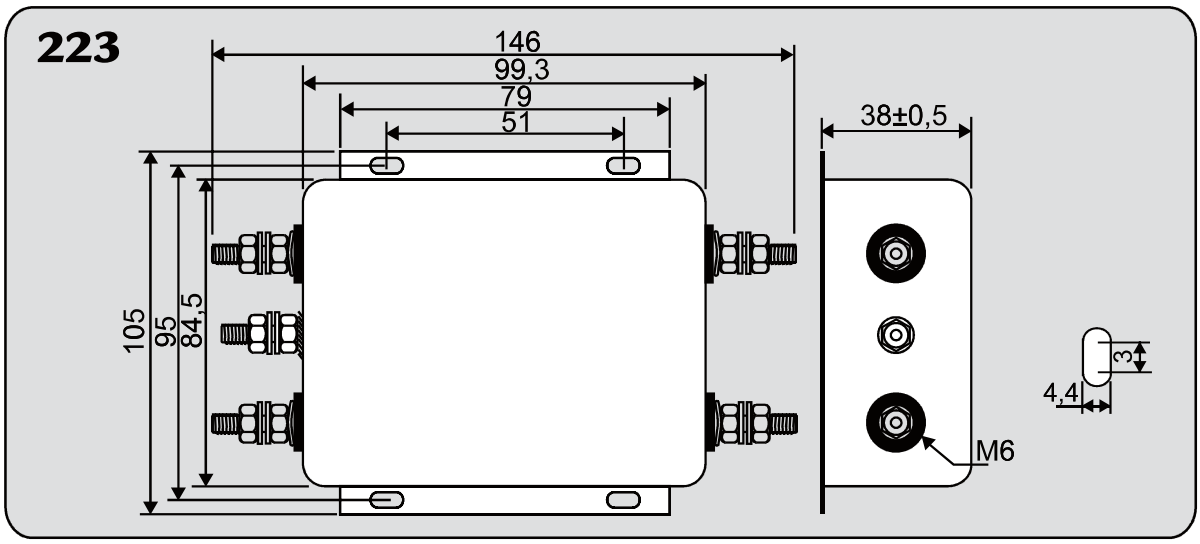

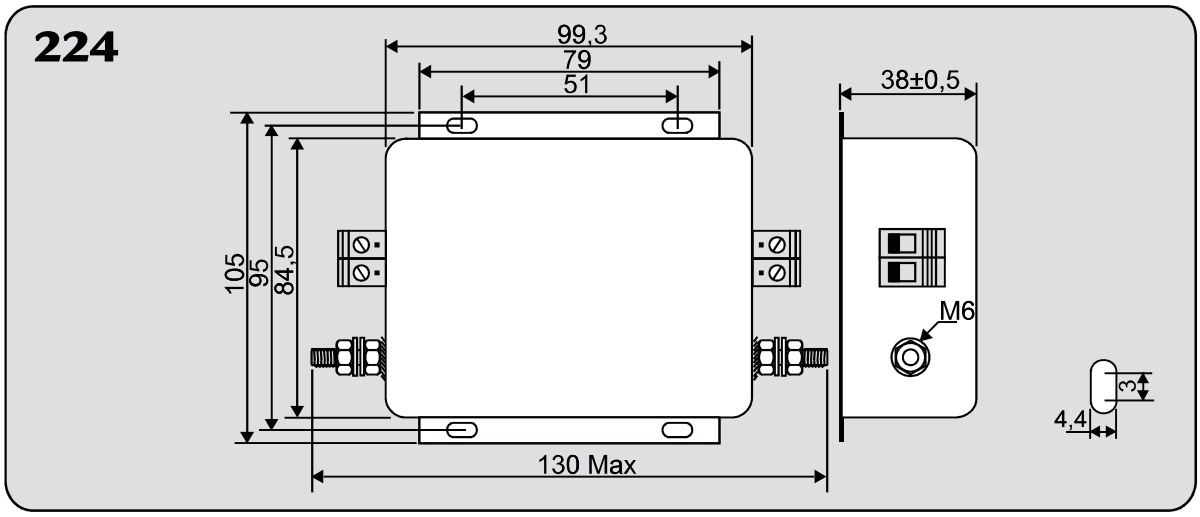

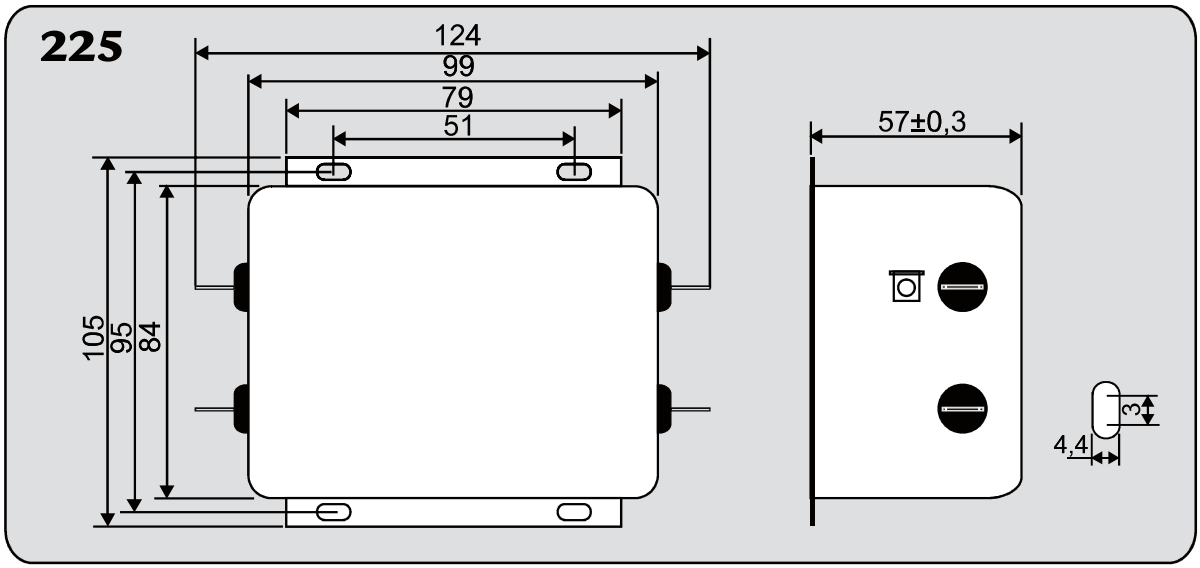

HOUSING

Mechanical dimensions

241

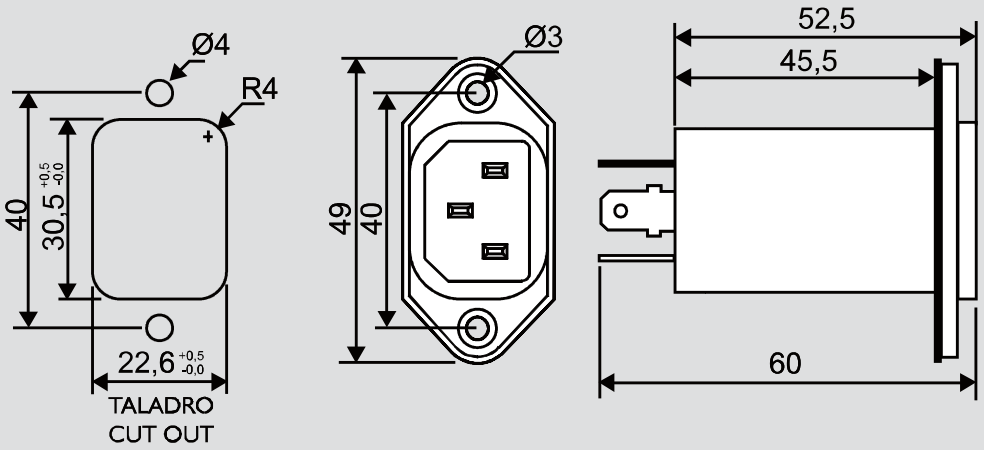

242

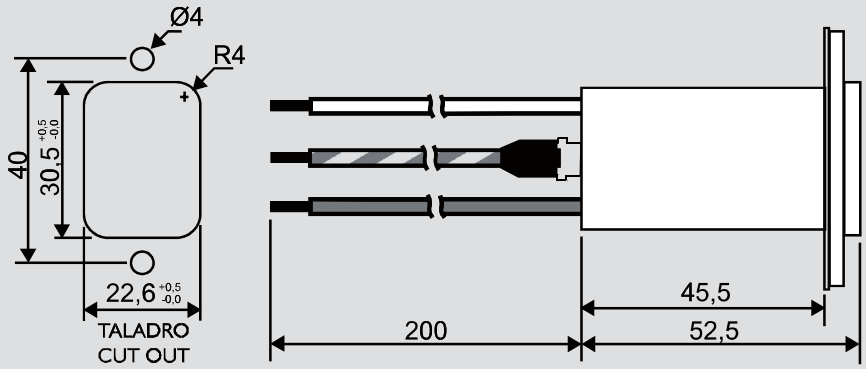

Wire Length 200 mm.

243

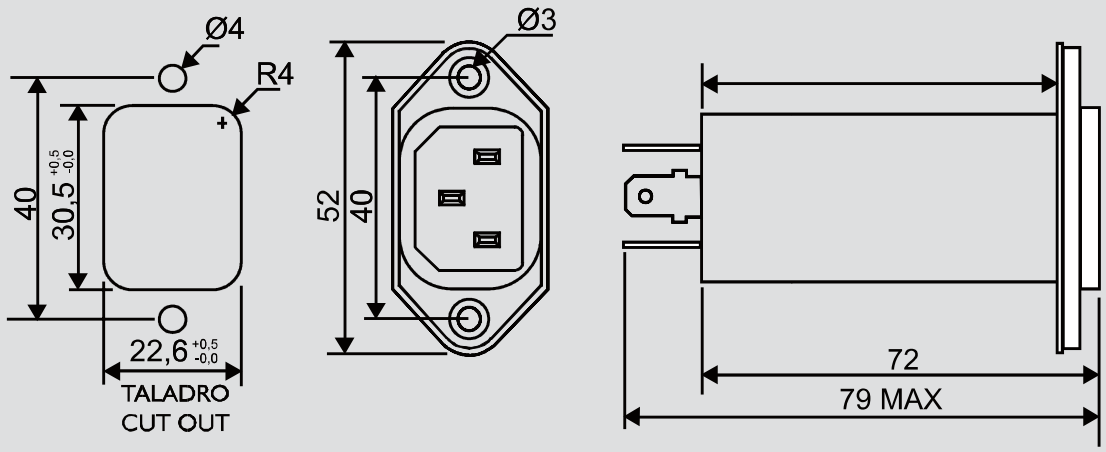

HOUSING

Mechanical dimensions

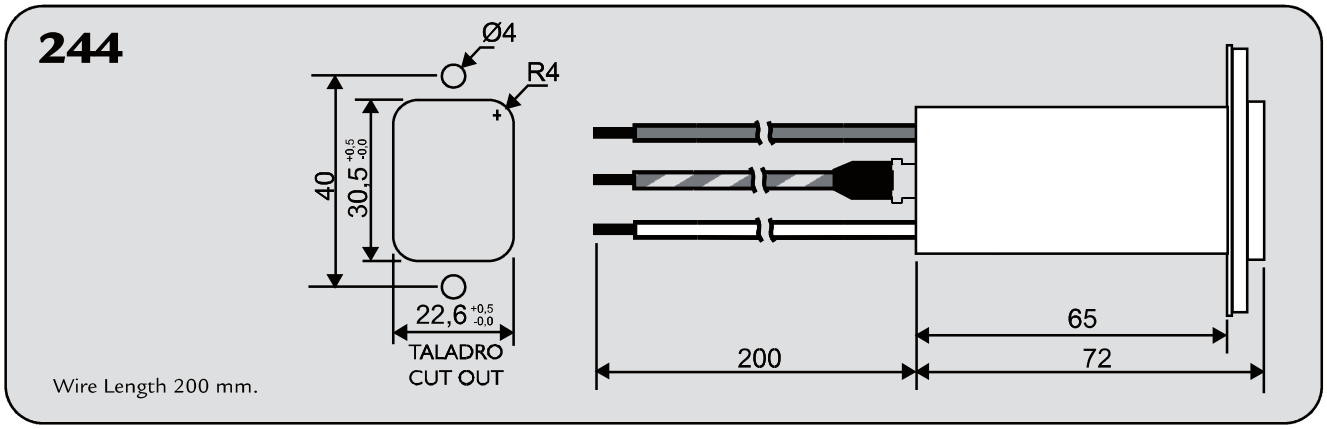

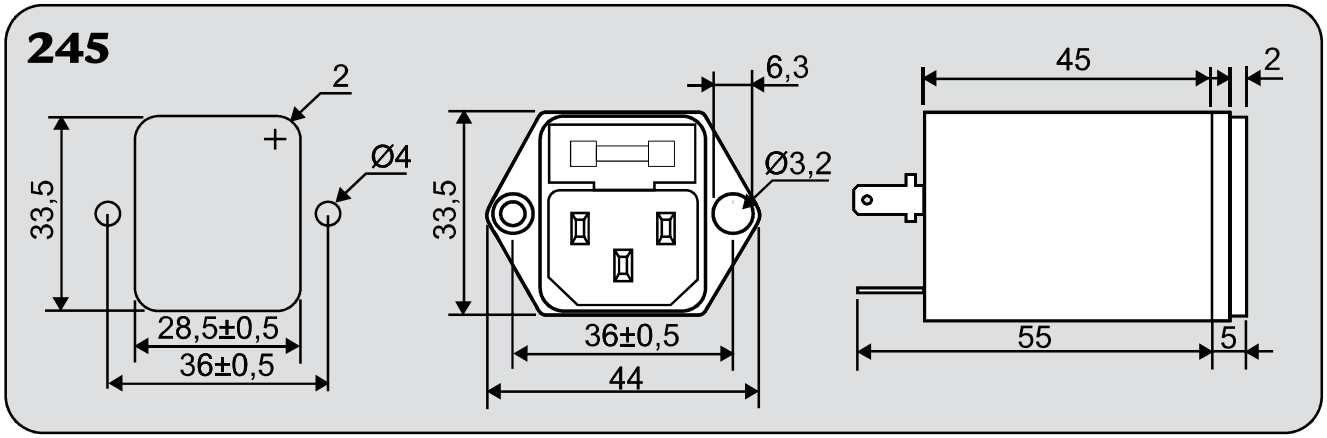

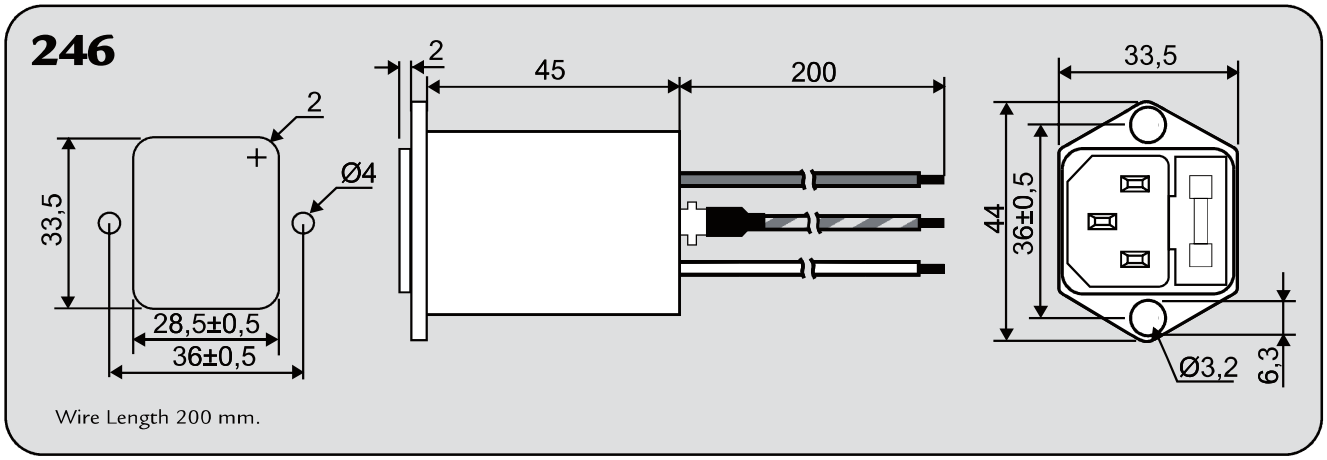

HOUSING

Mechanical dimensions

247

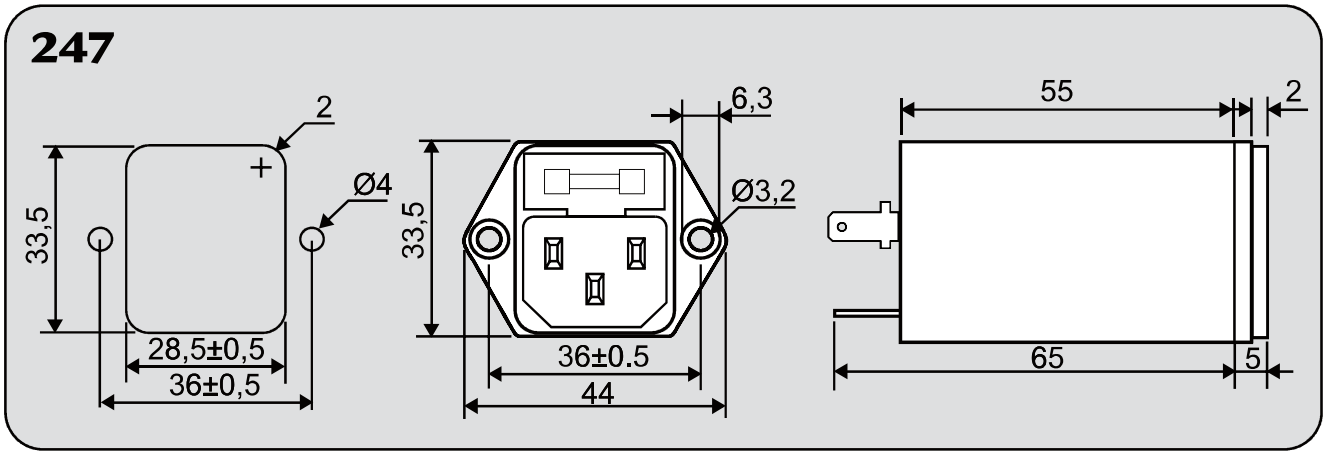

248

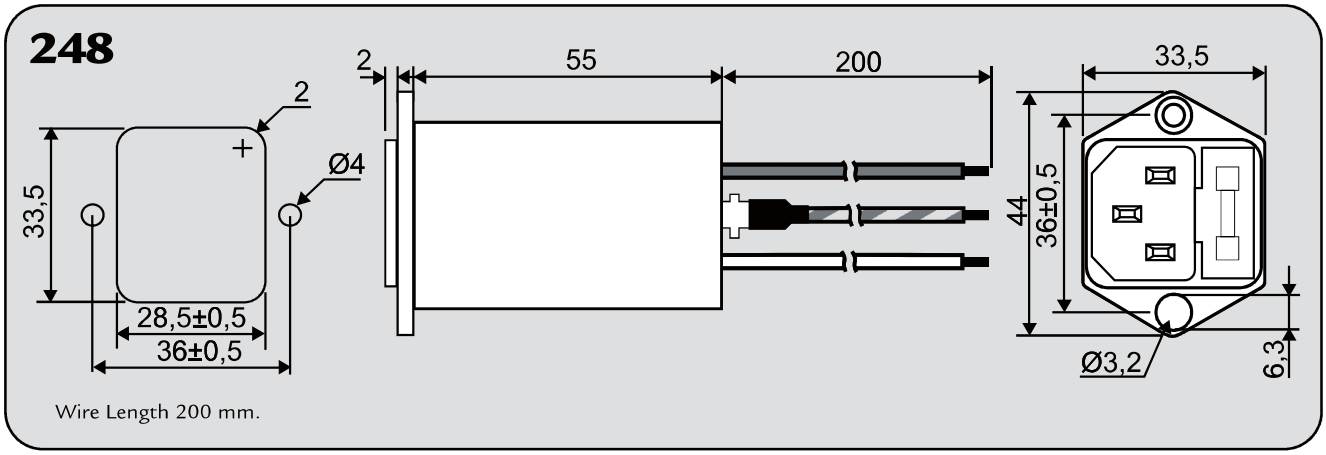

249

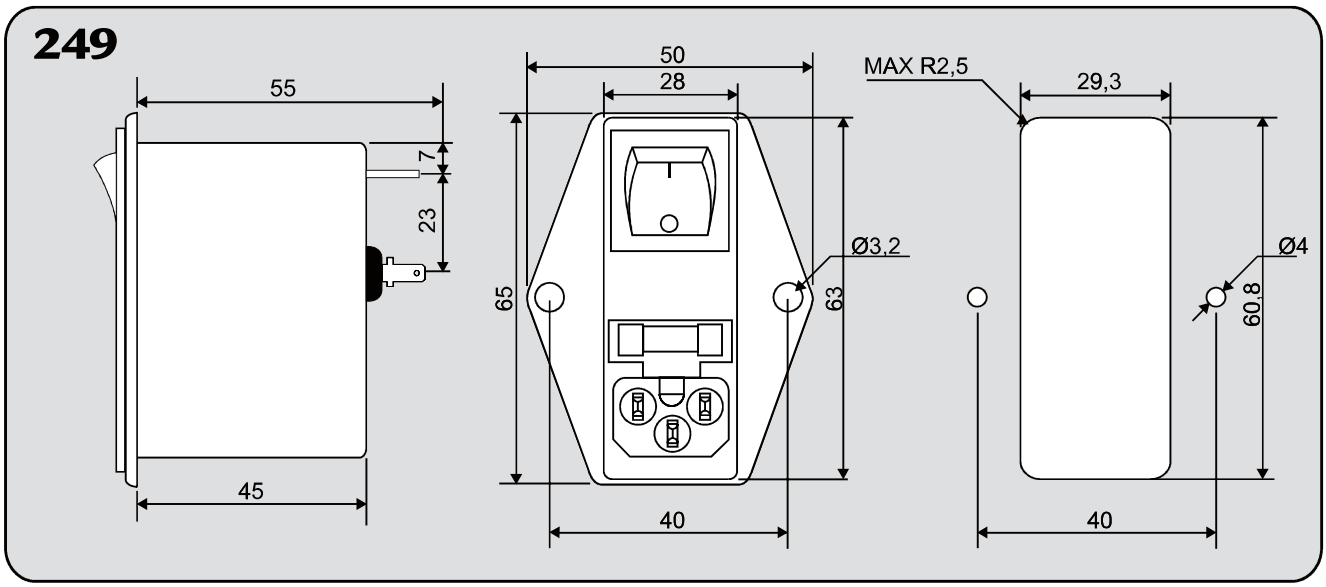

HOUSING

Mechanical dimensions

250

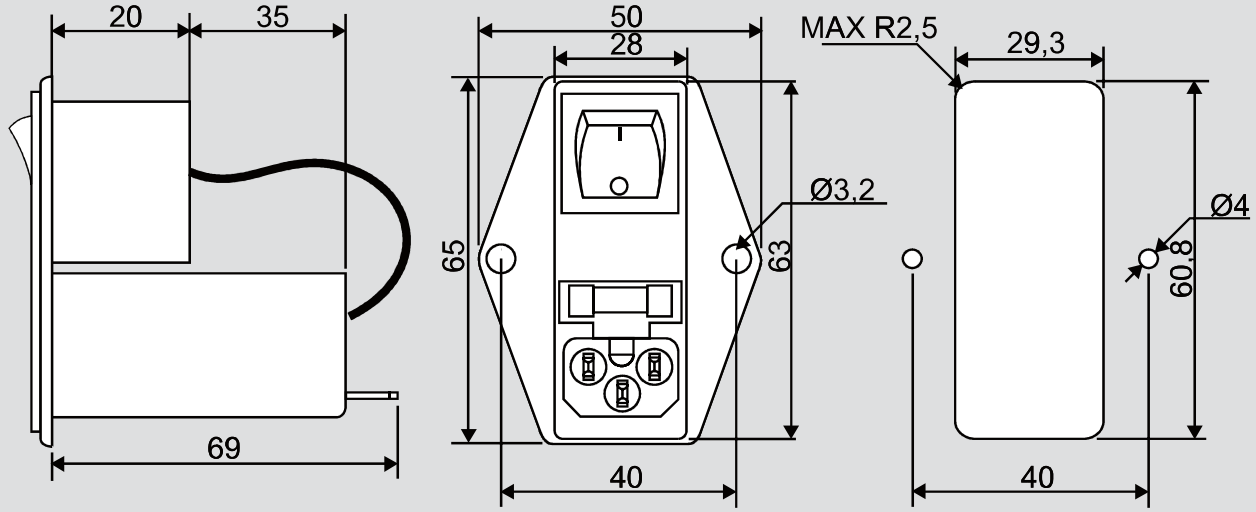

251

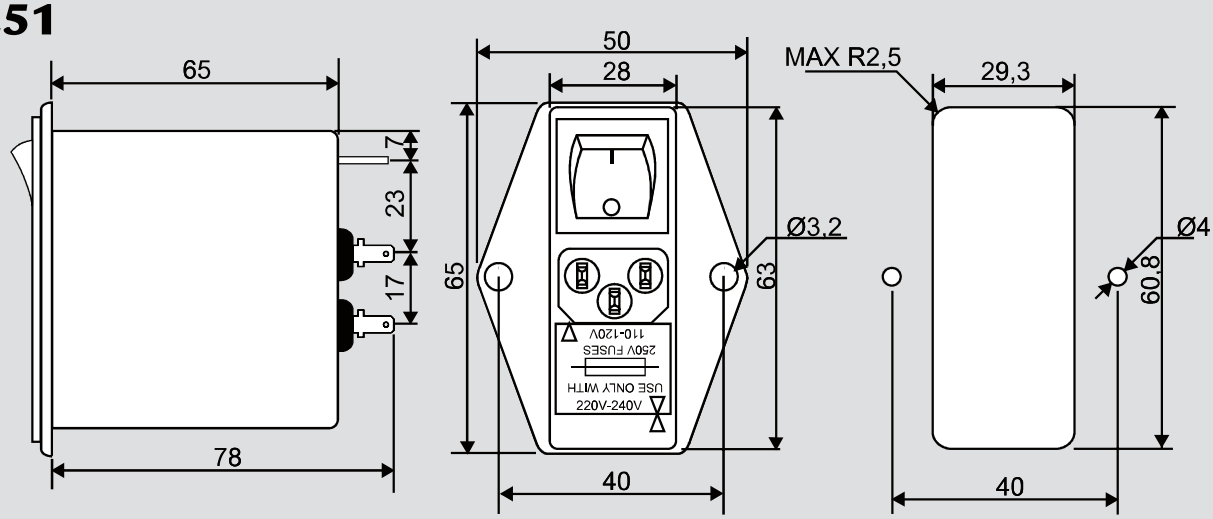

252

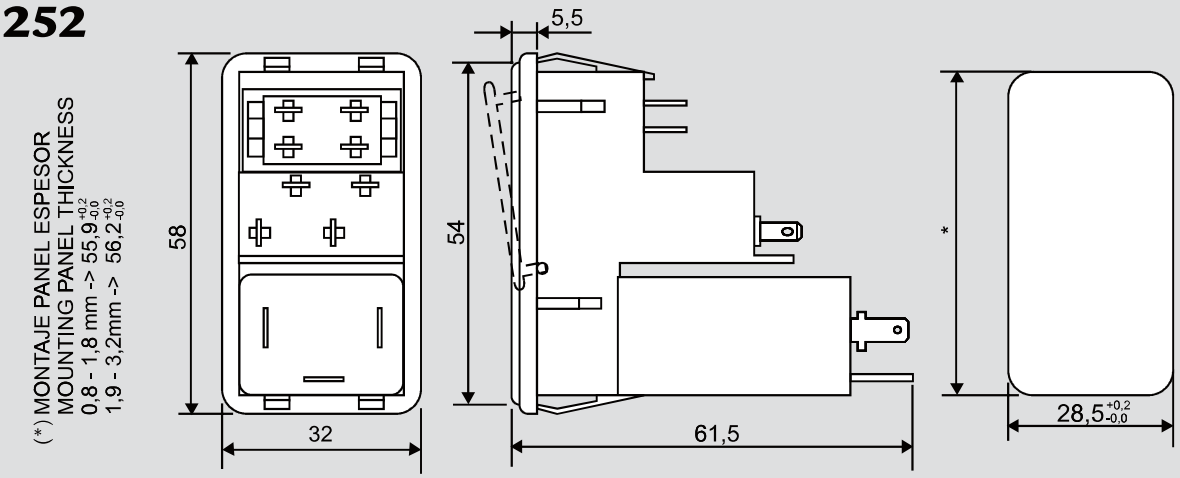

HOUSING

Mechanical dimensions

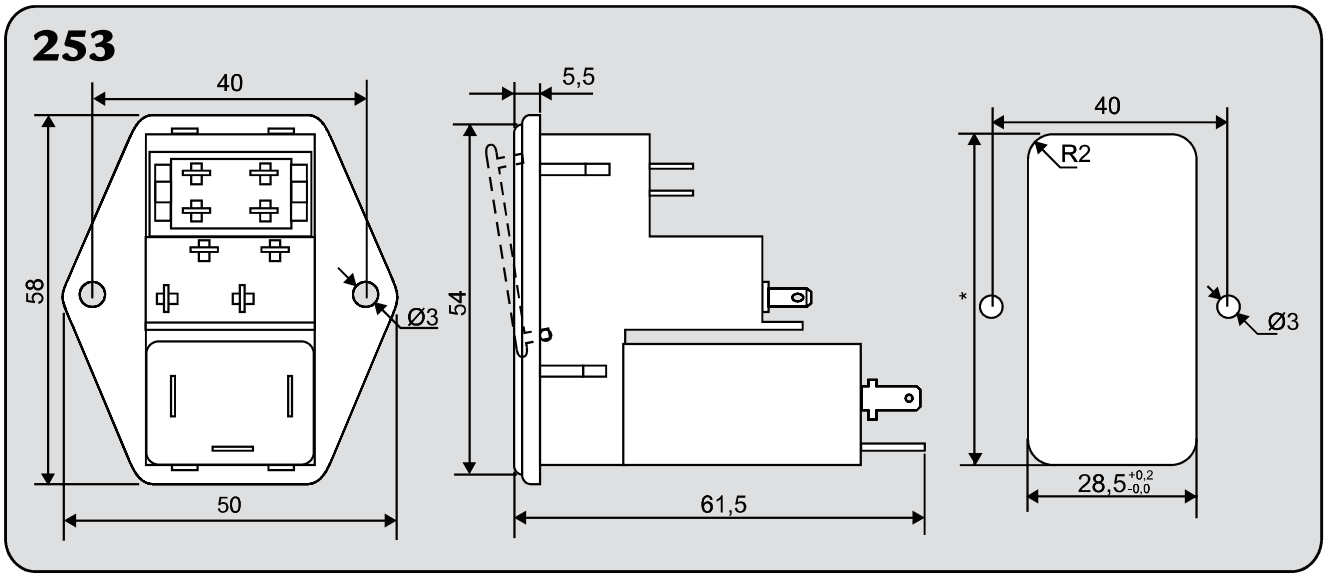

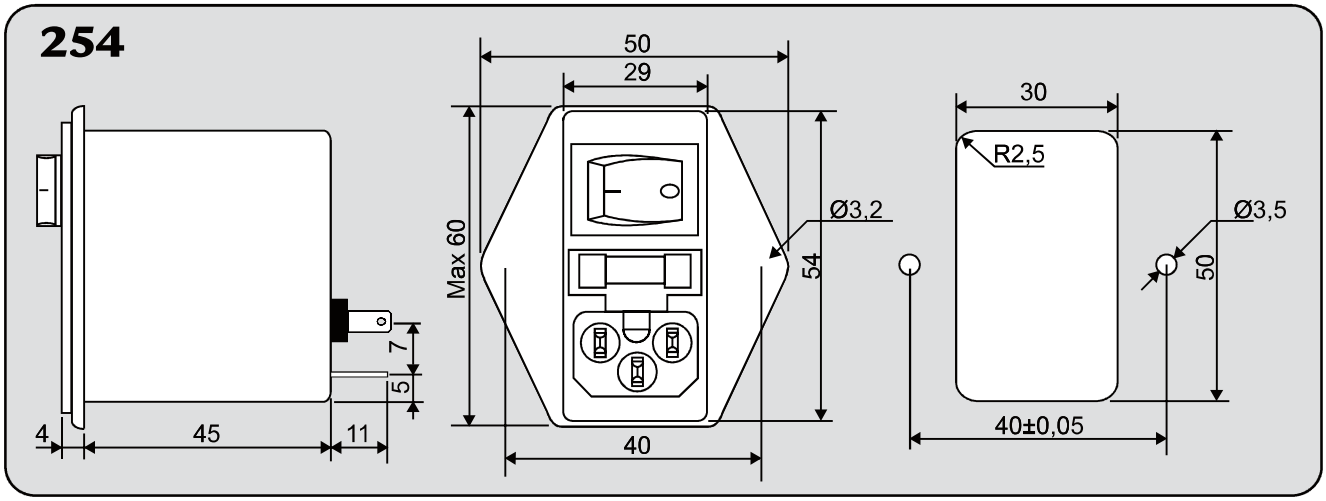

HOUSING

Mechanical dimensions

271

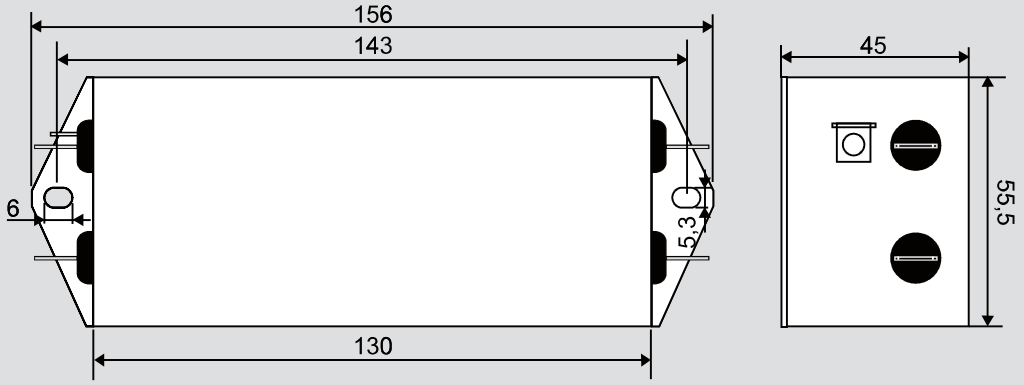

272

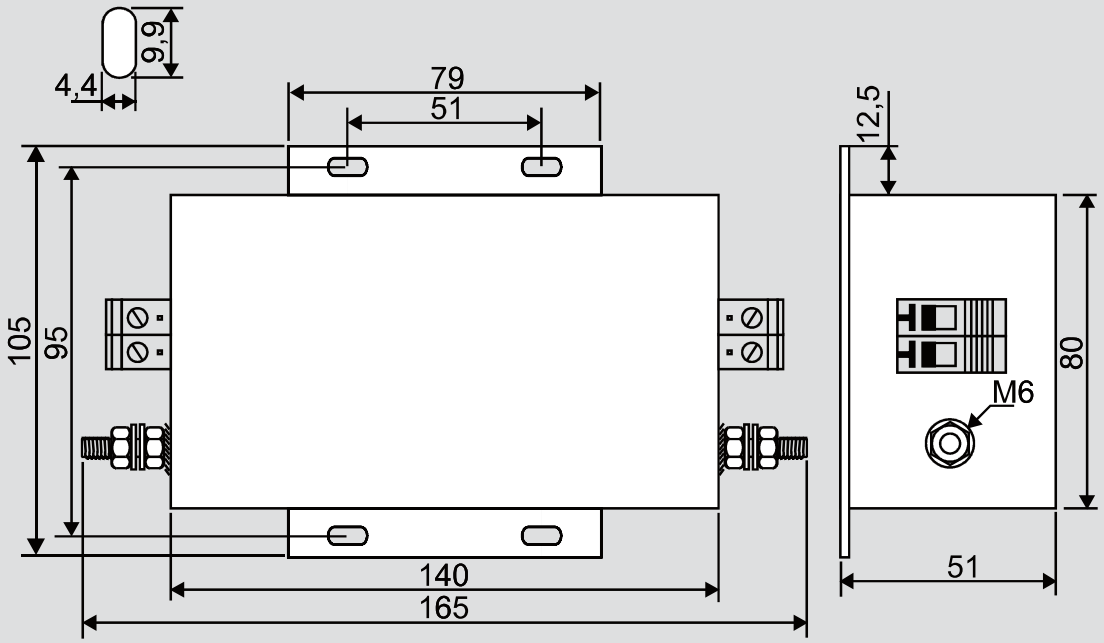

273

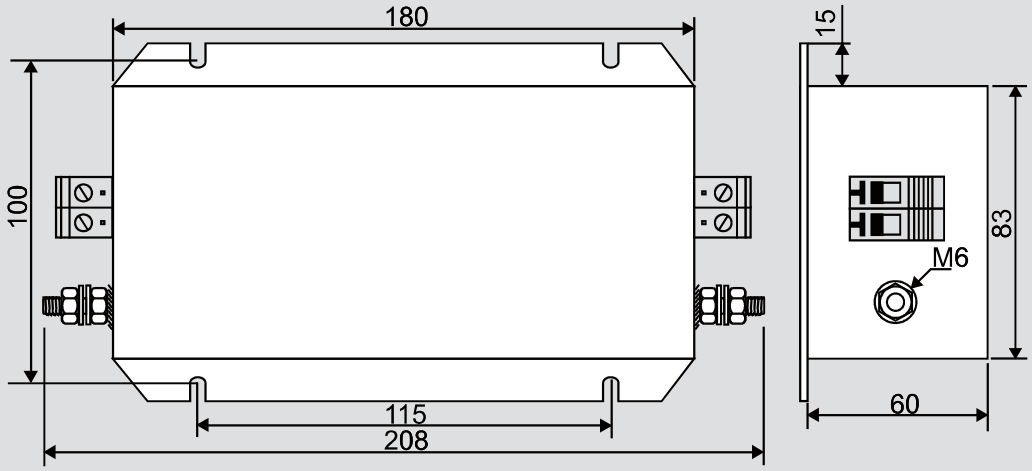

HOUSING

Mechanical dimensions

274

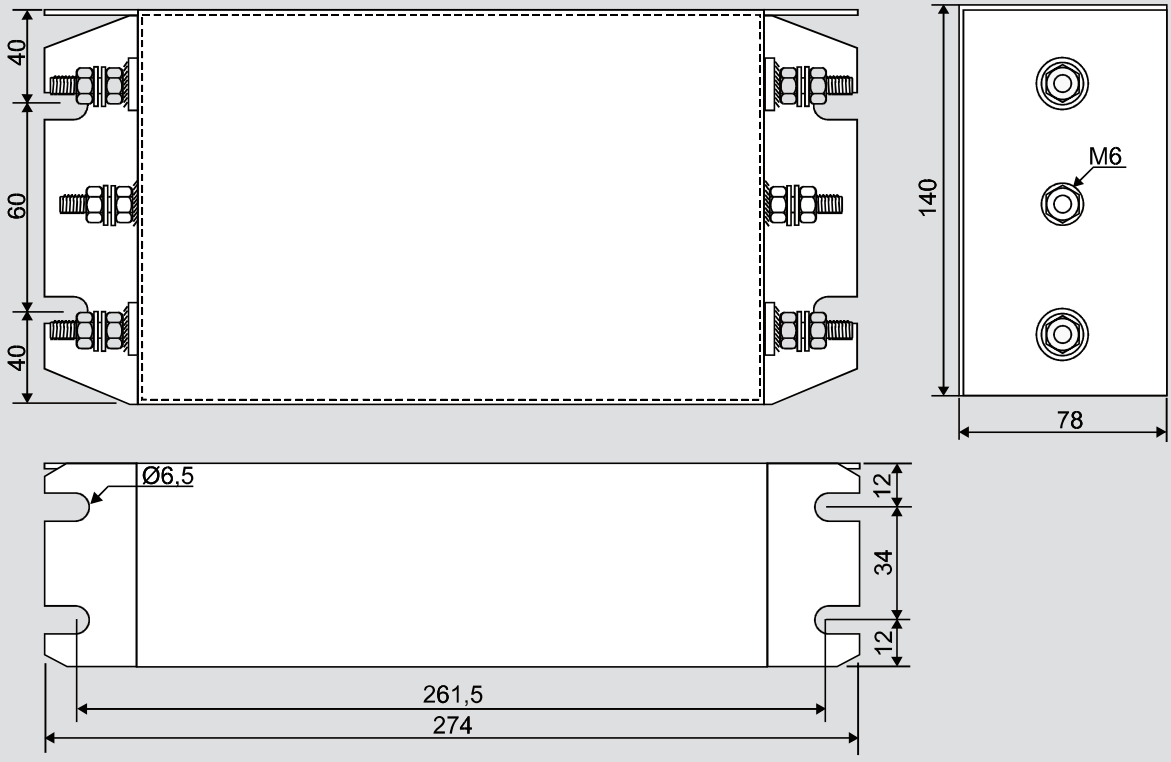

275

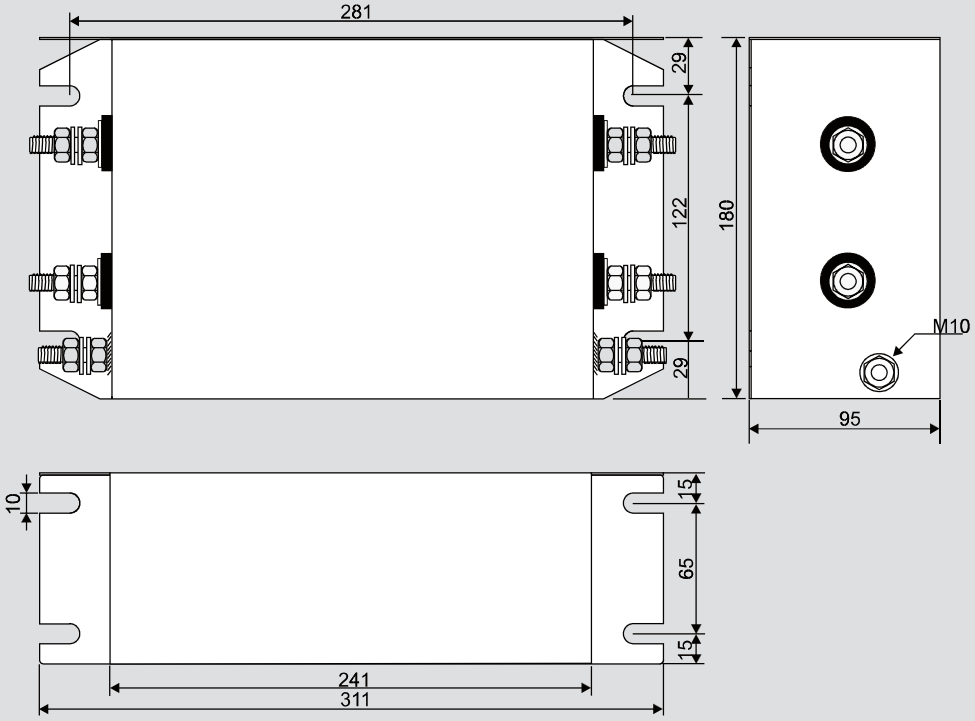

HOUSING

Mechanical dimensions

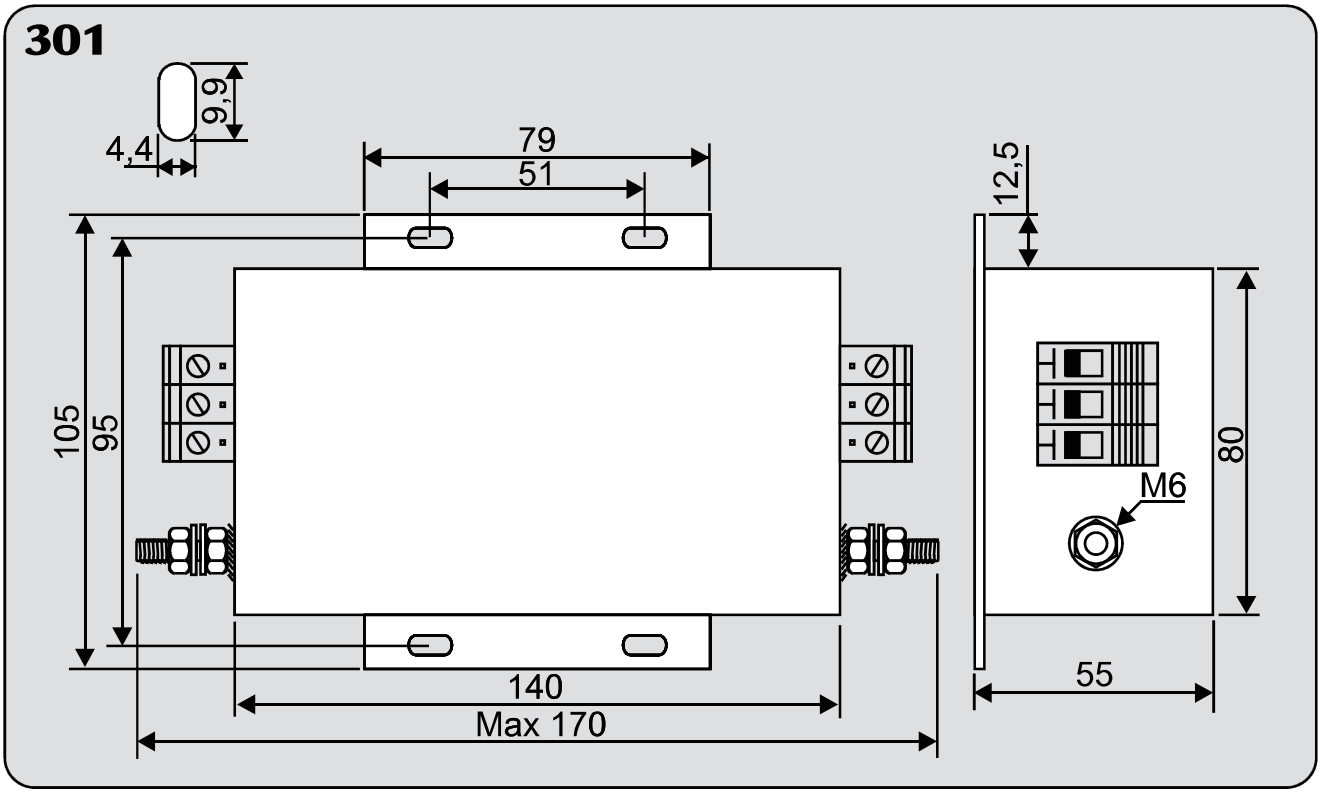

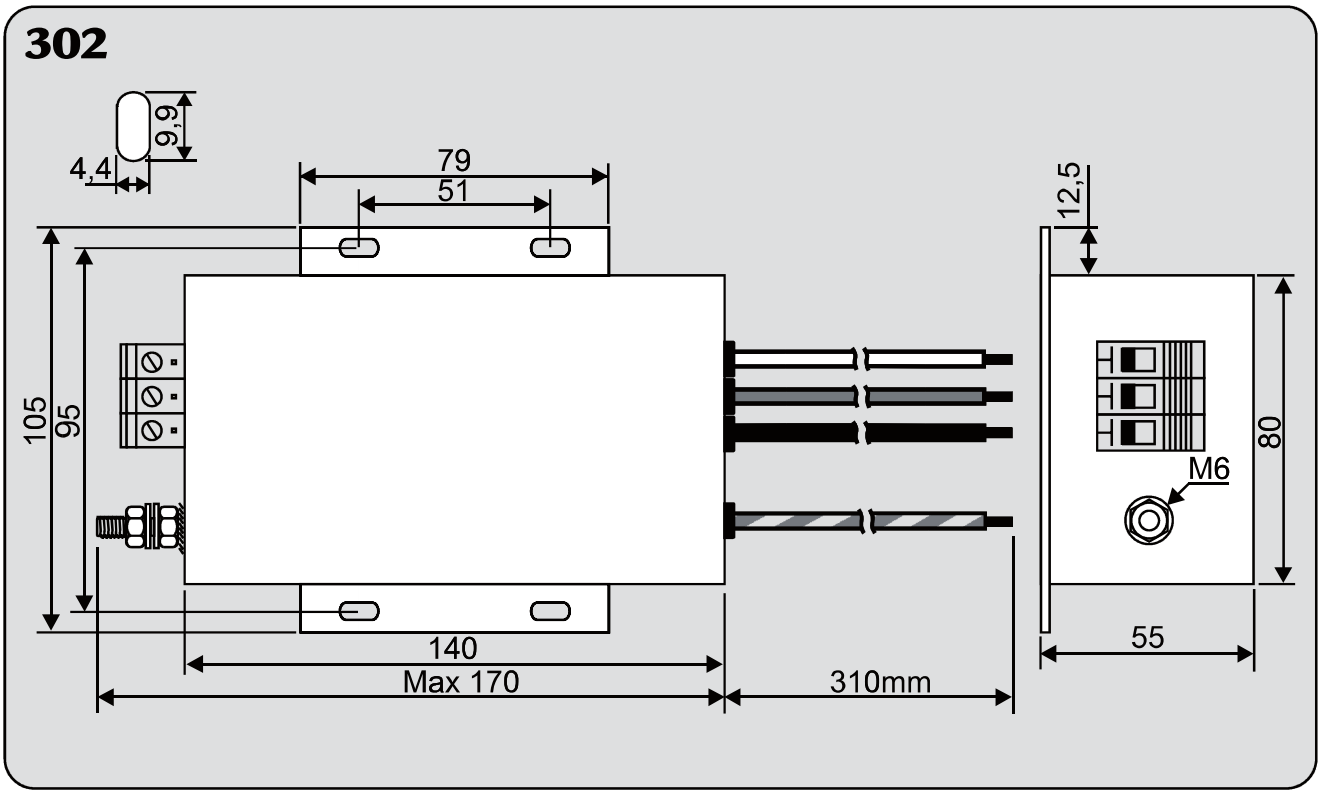

HOUSING

Mechanical dimensions

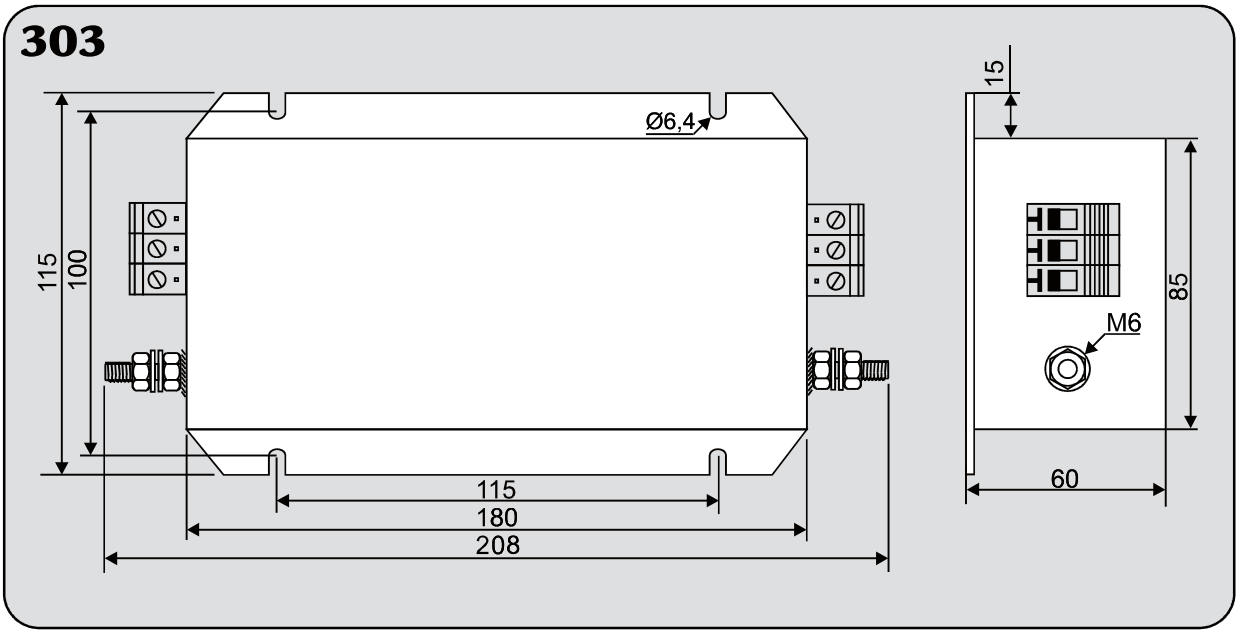

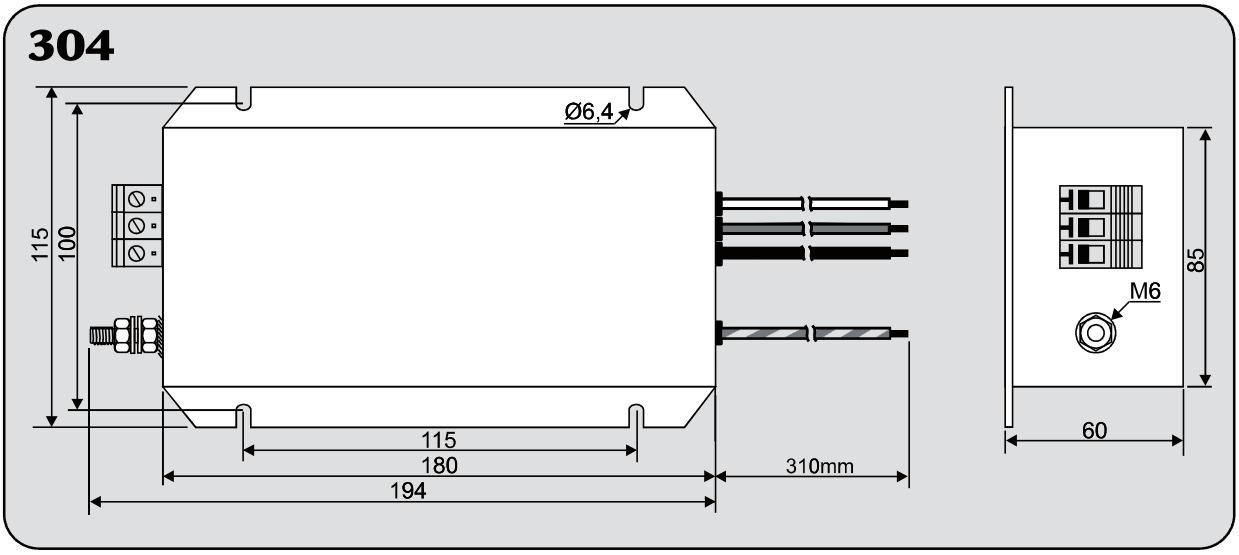

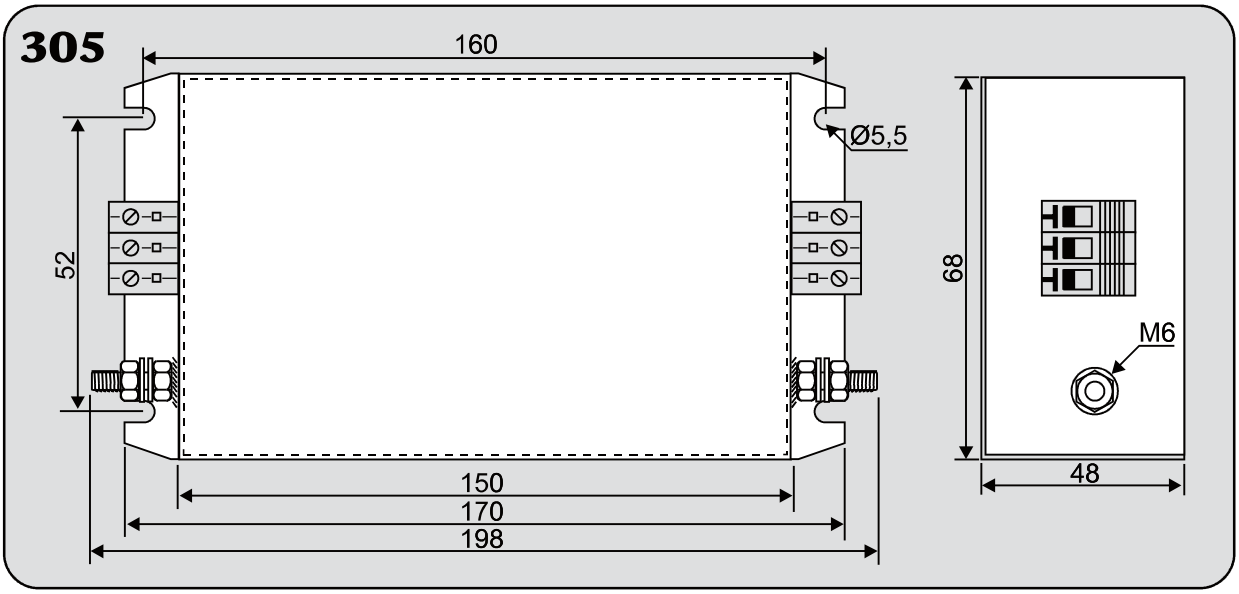

HOUSING

Mechanical dimensions

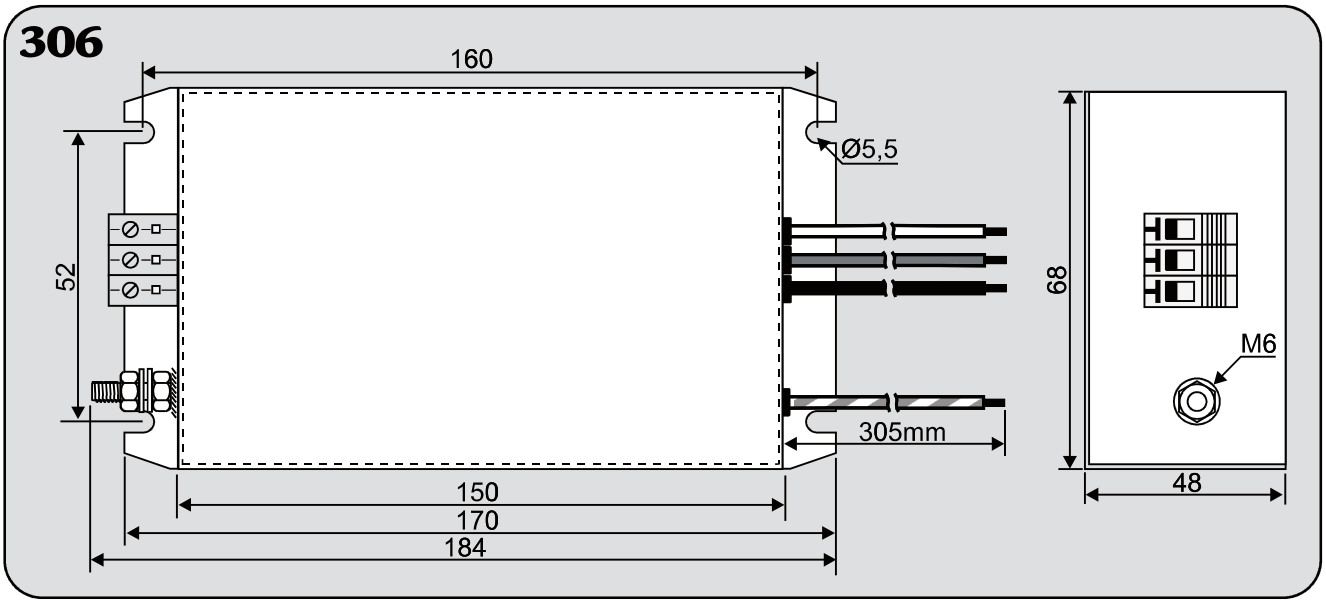

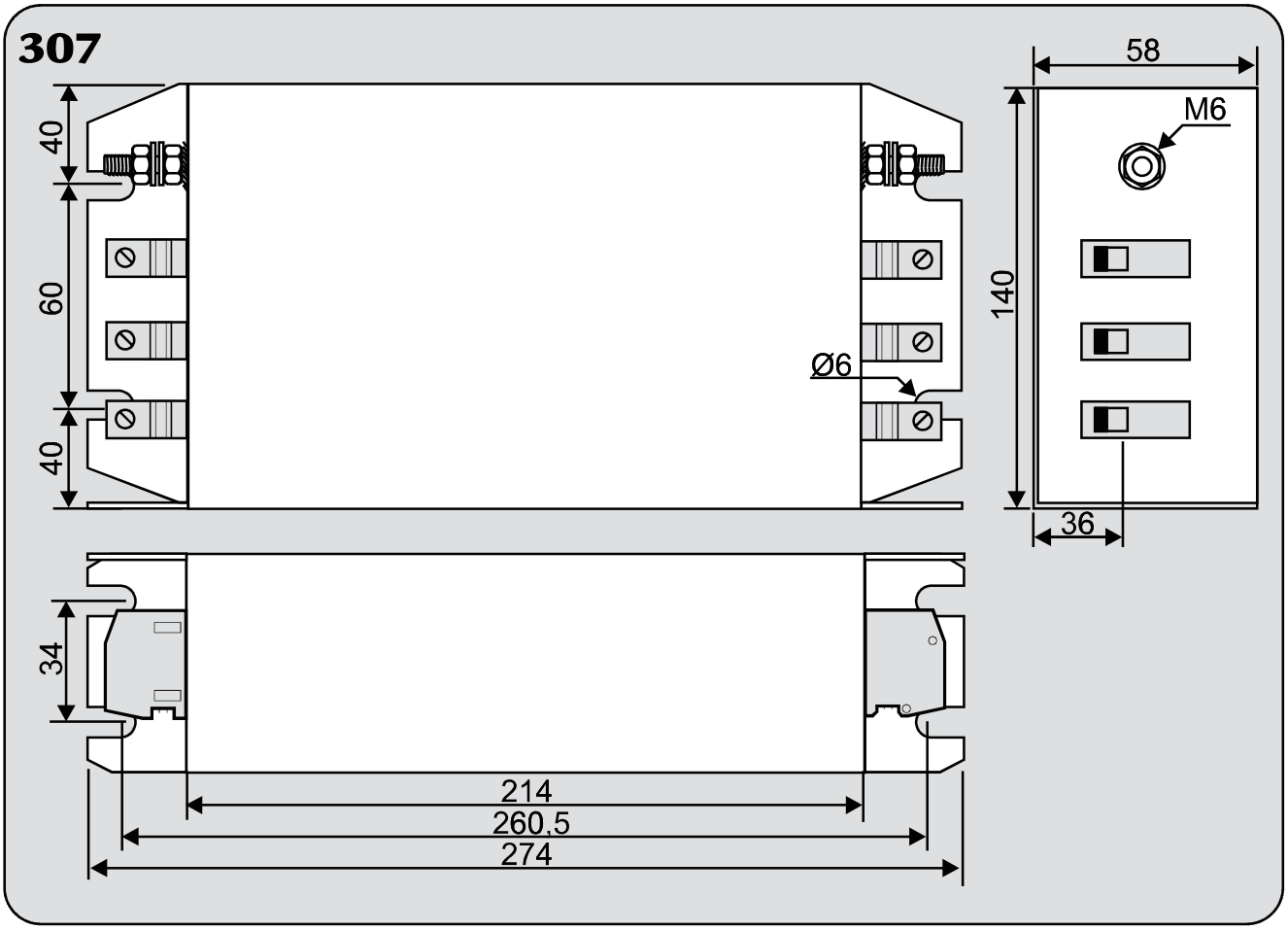

HOUSING

Mechanical dimensions

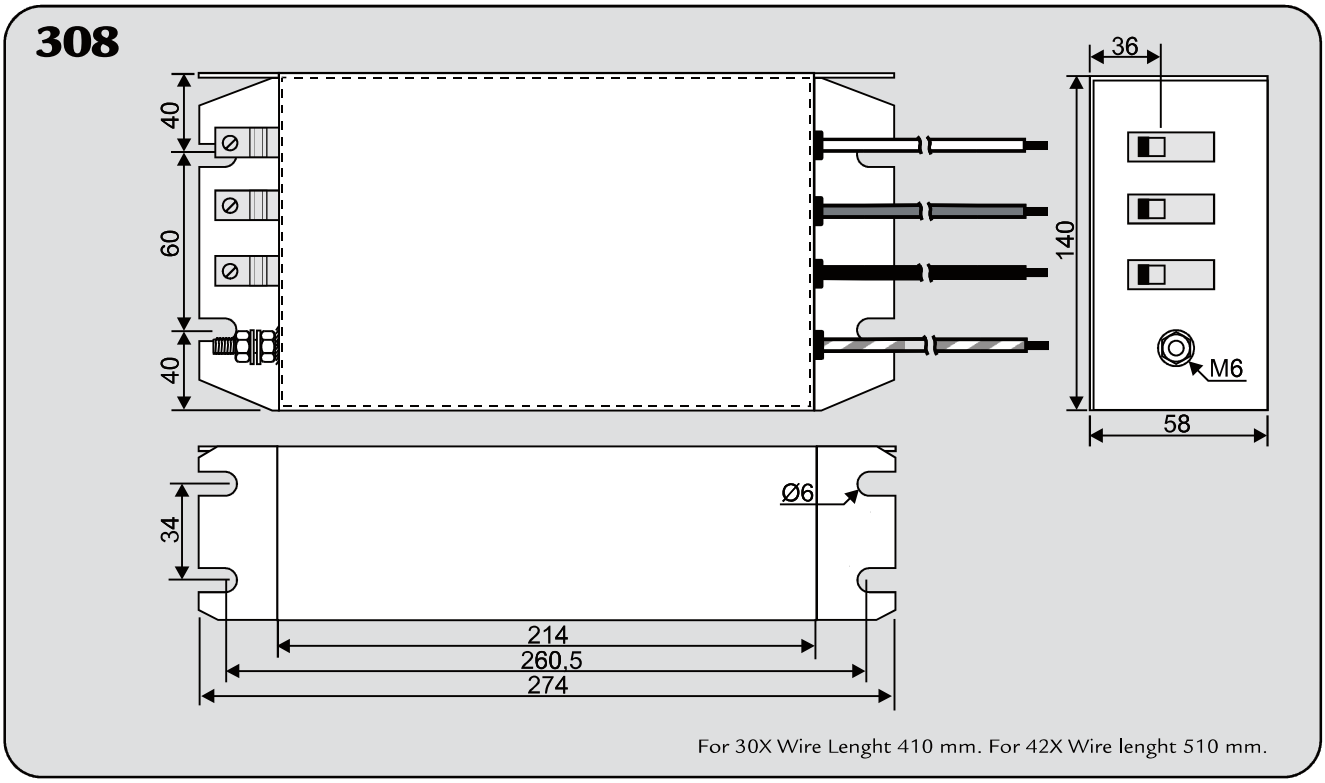

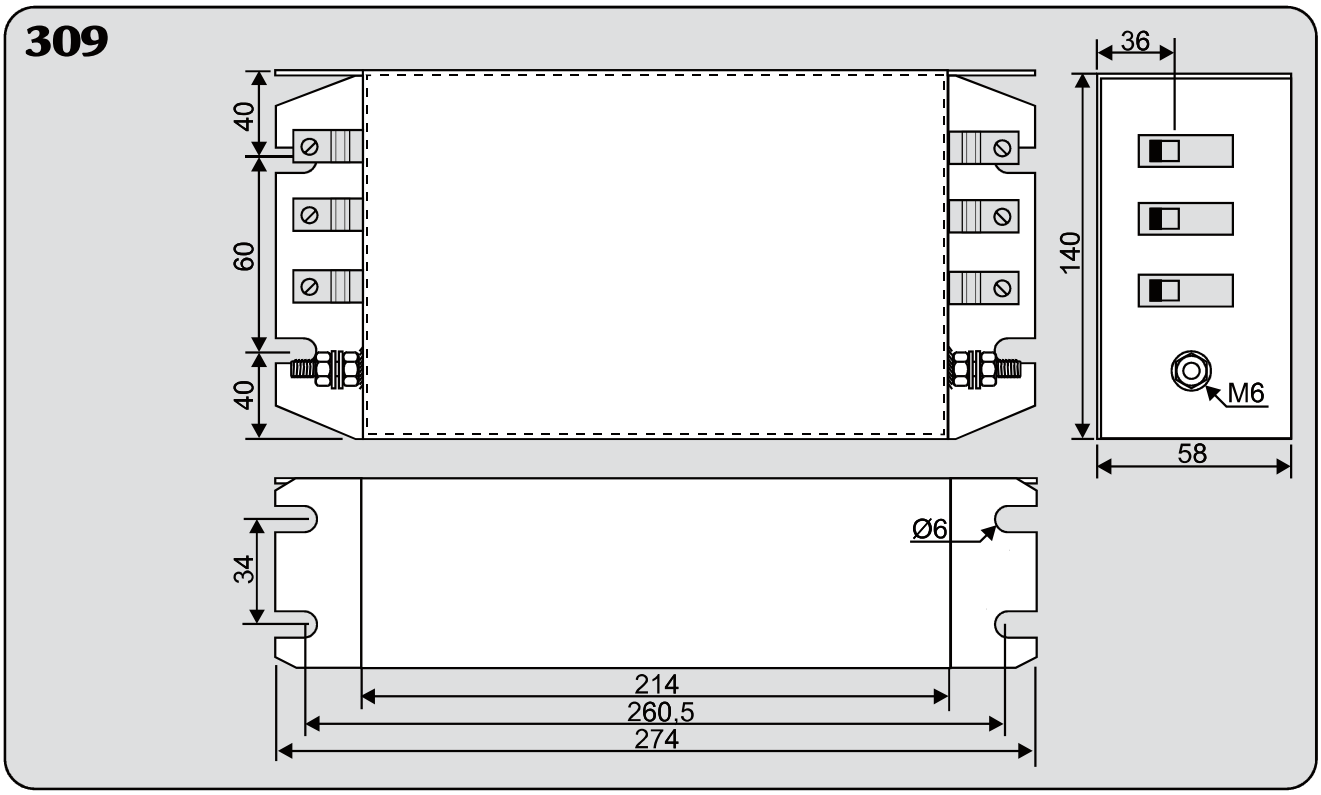

HOUSING

Mechanical dimensions

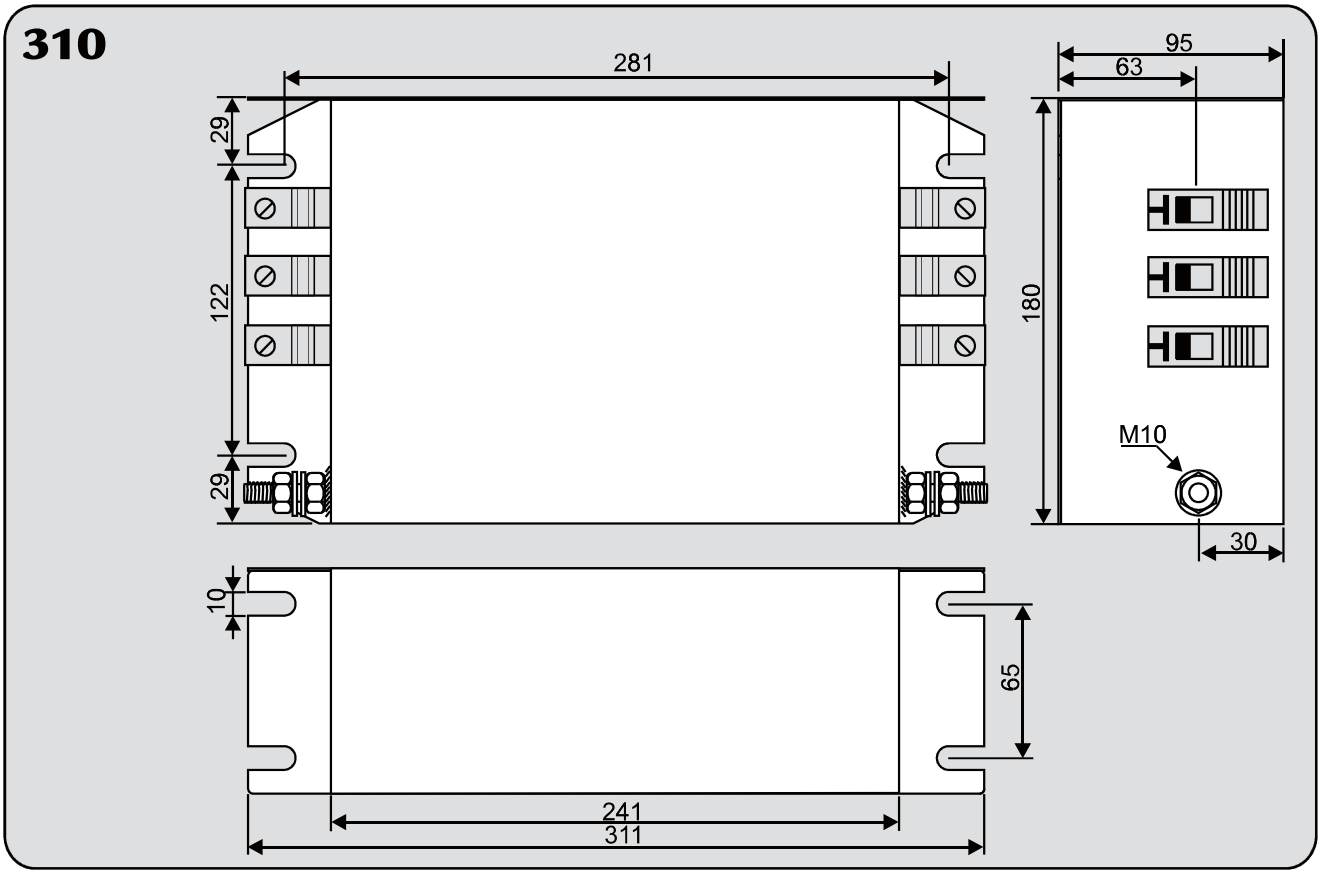

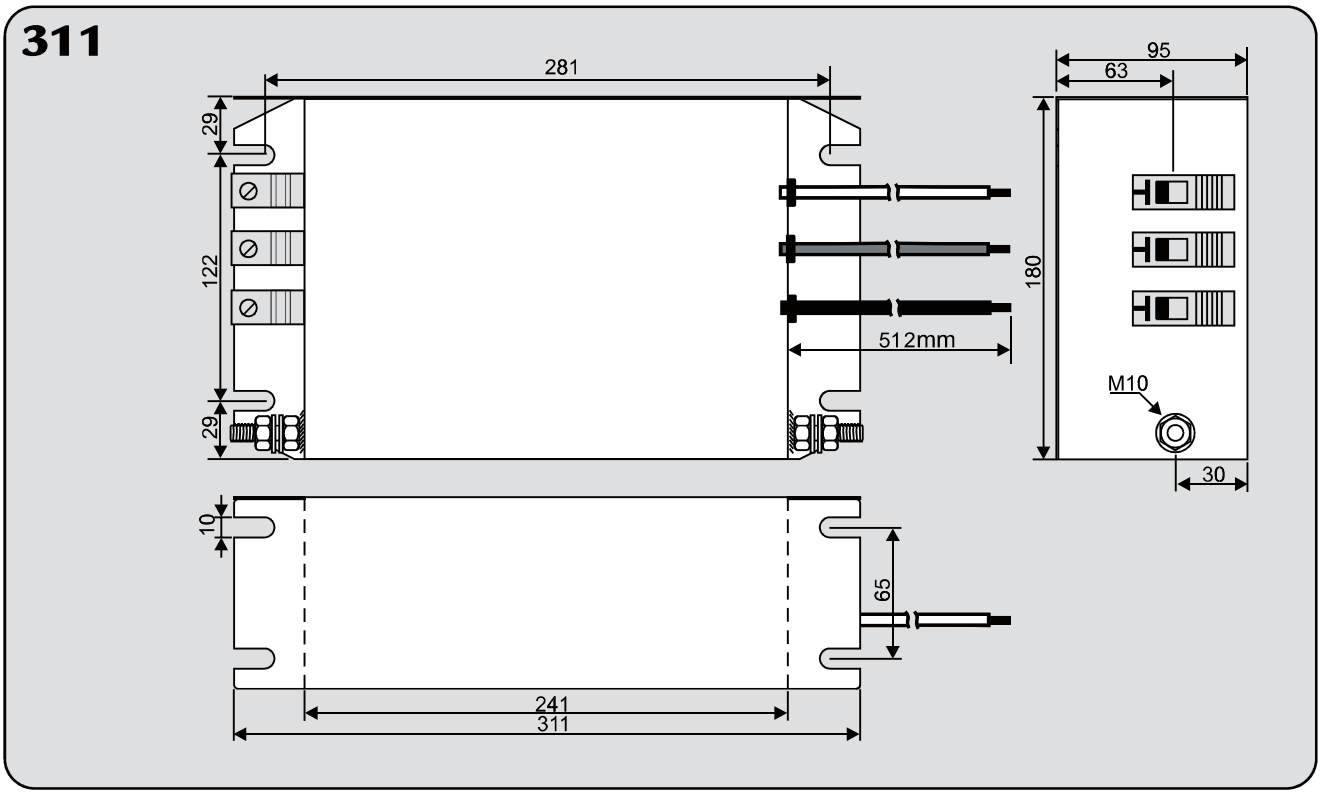

HOUSING

Mechanical dimensions

312

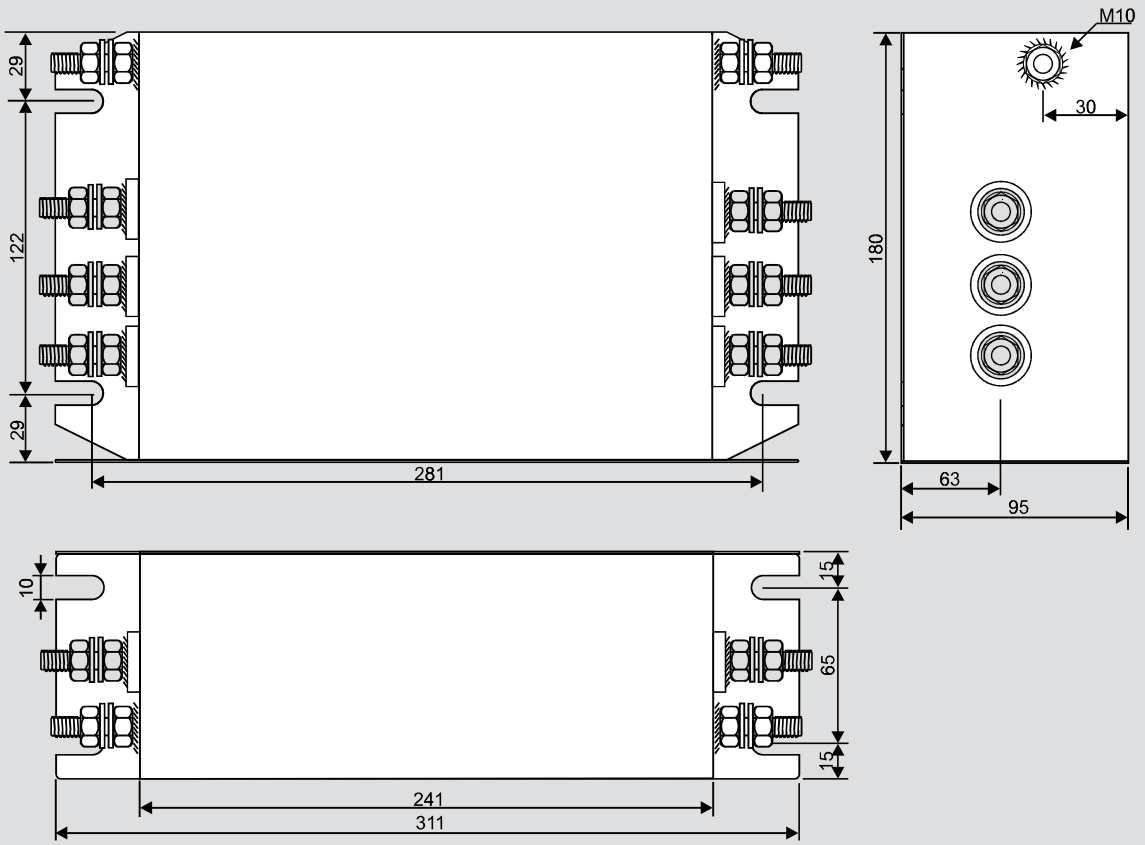

313

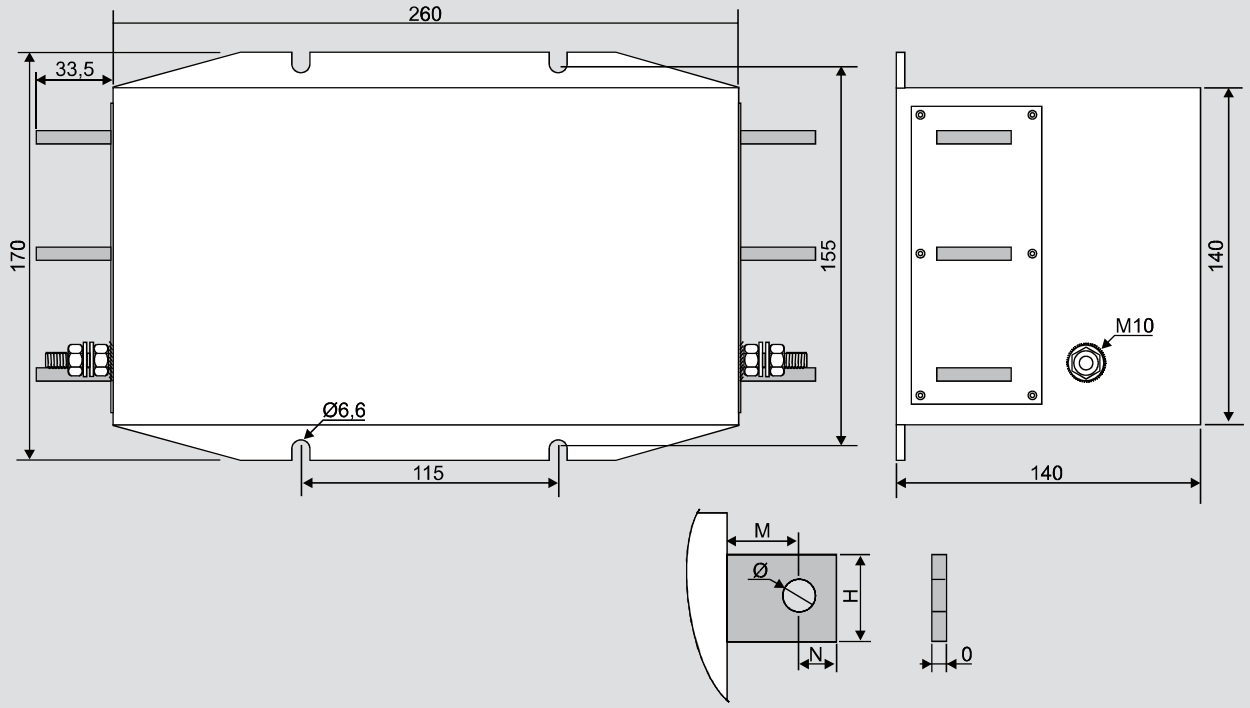

HOUSING

Mechanical dimensions

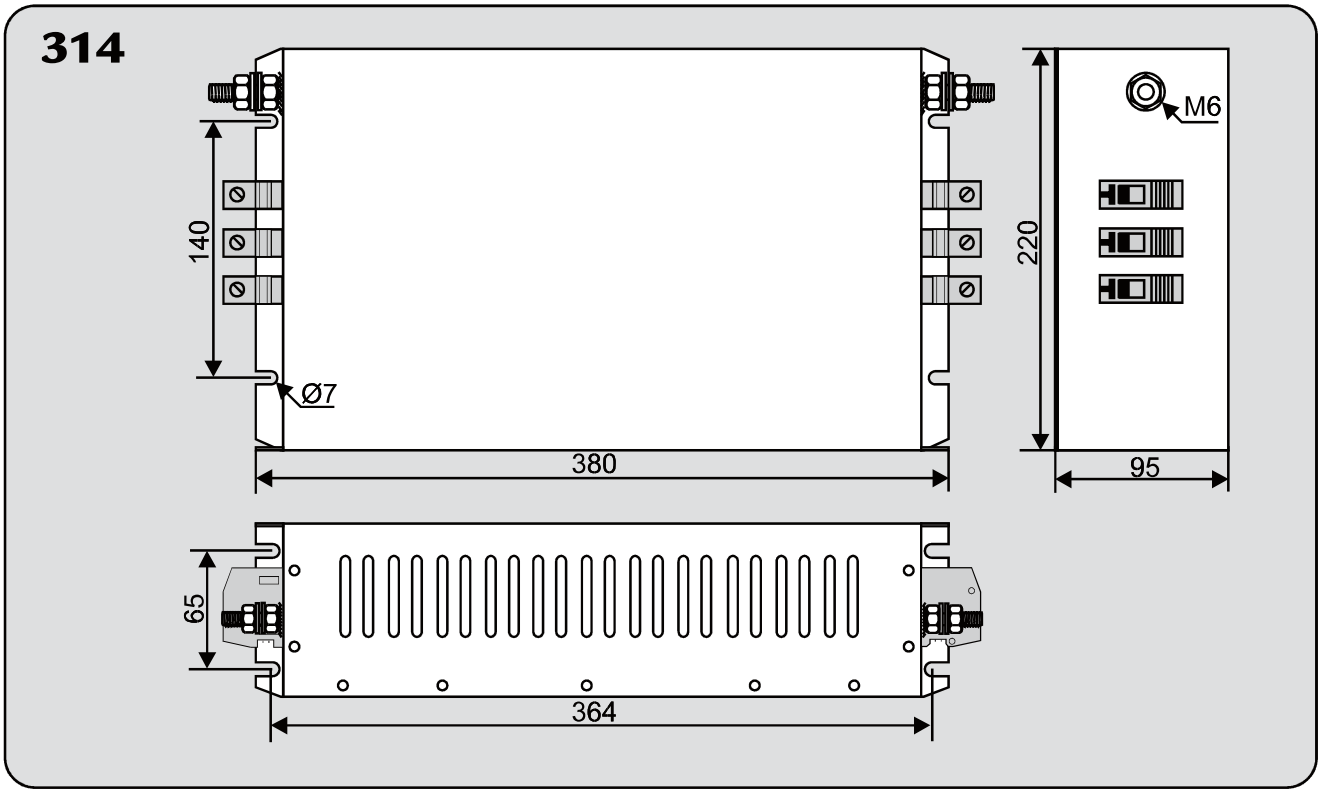

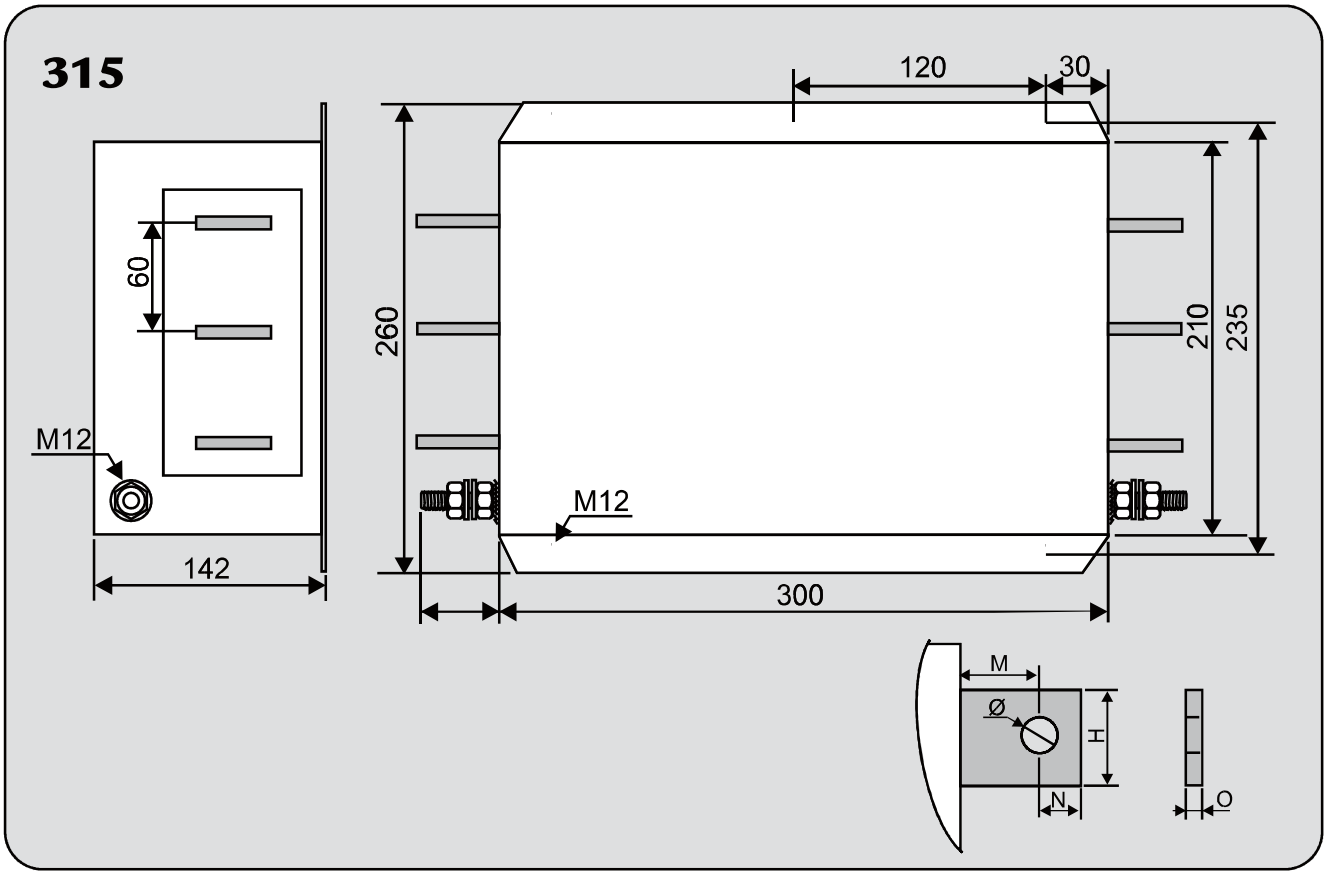

HOUSING

Mechanical dimensions

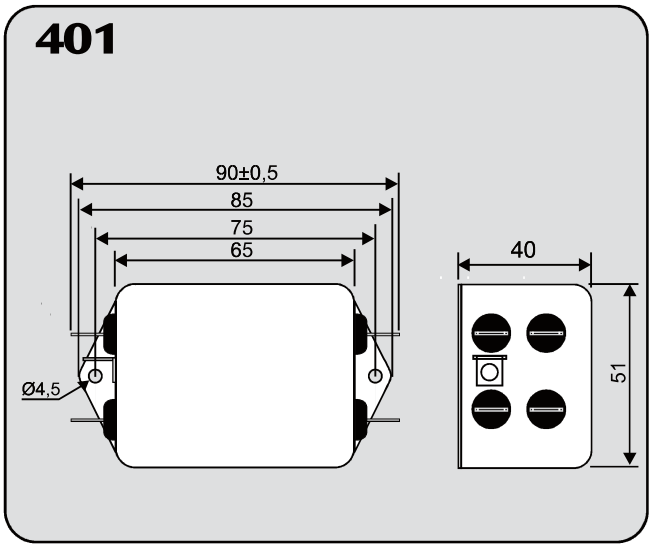

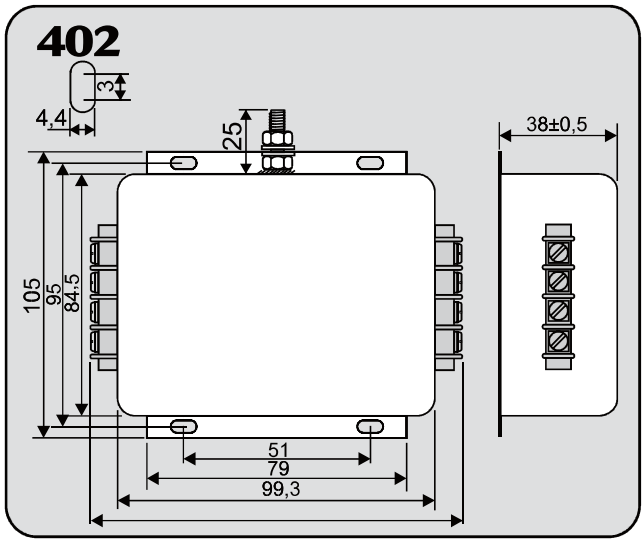

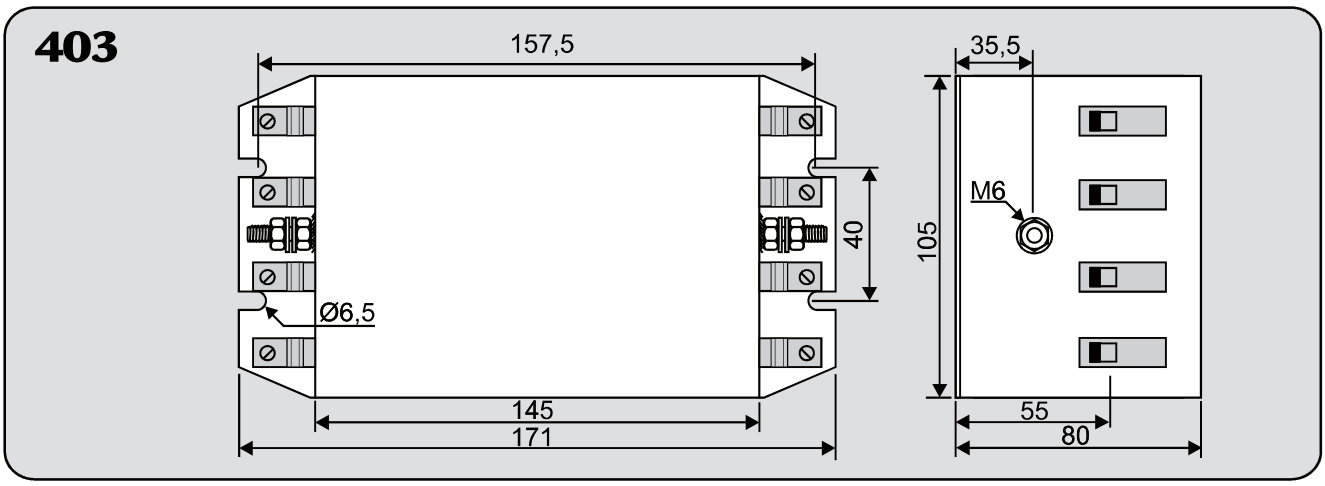

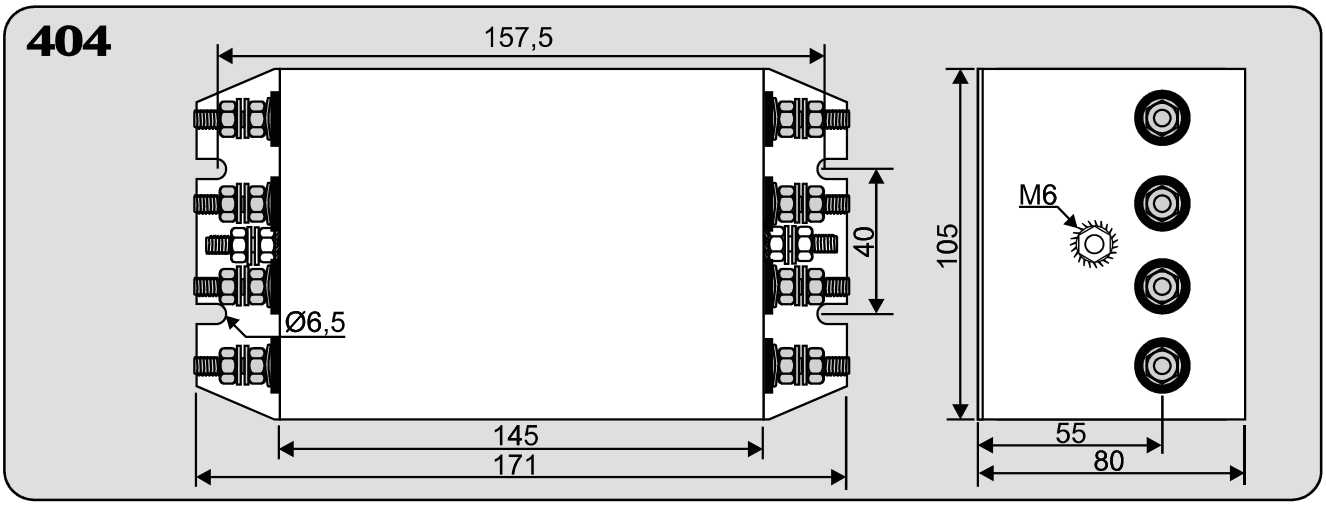

HOUSING

Mechanical dimensions

405

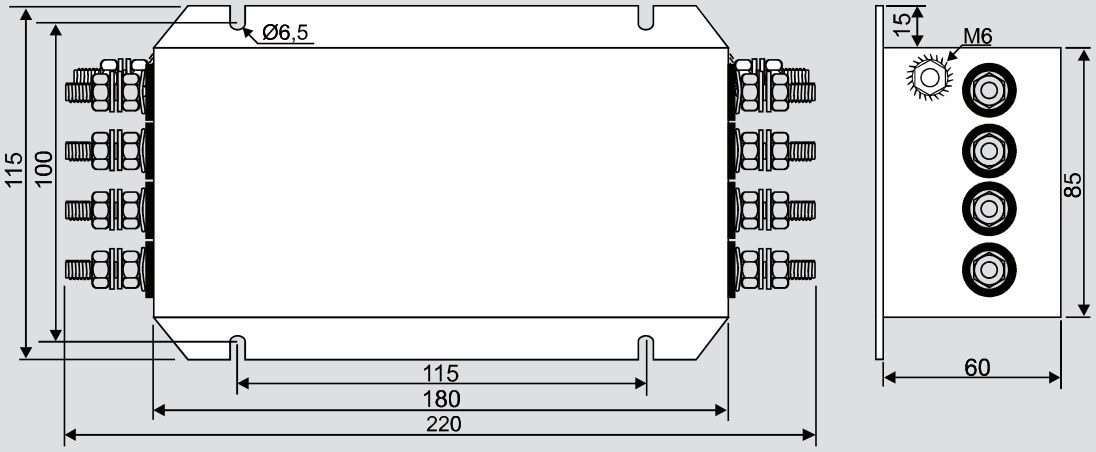

406

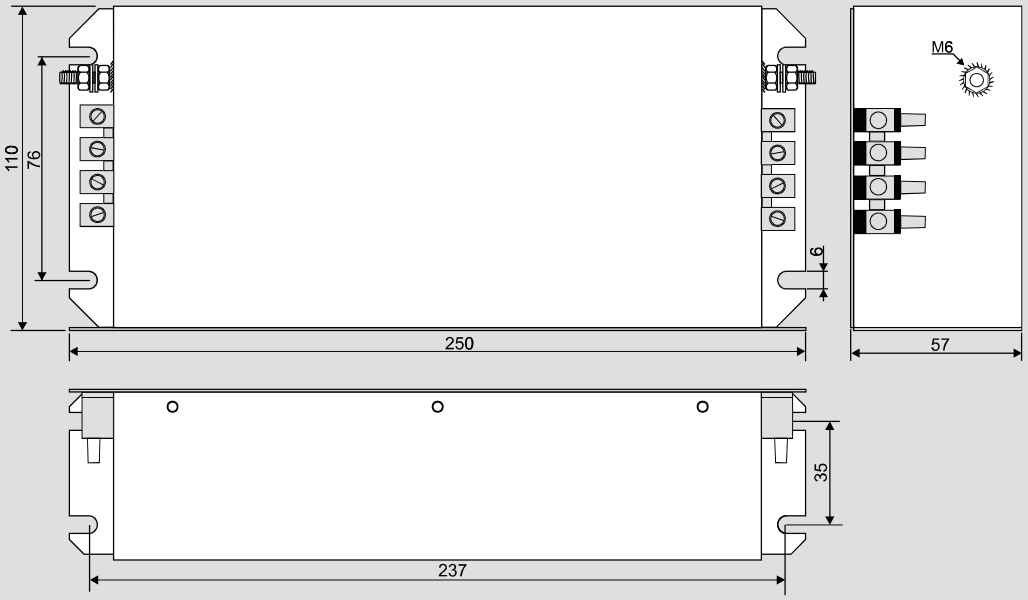

407

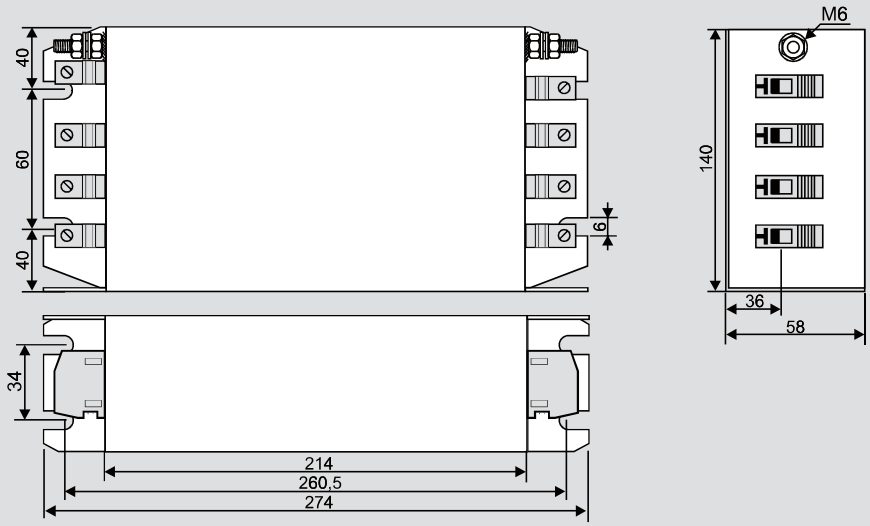

HOUSING

Mechanical dimensions

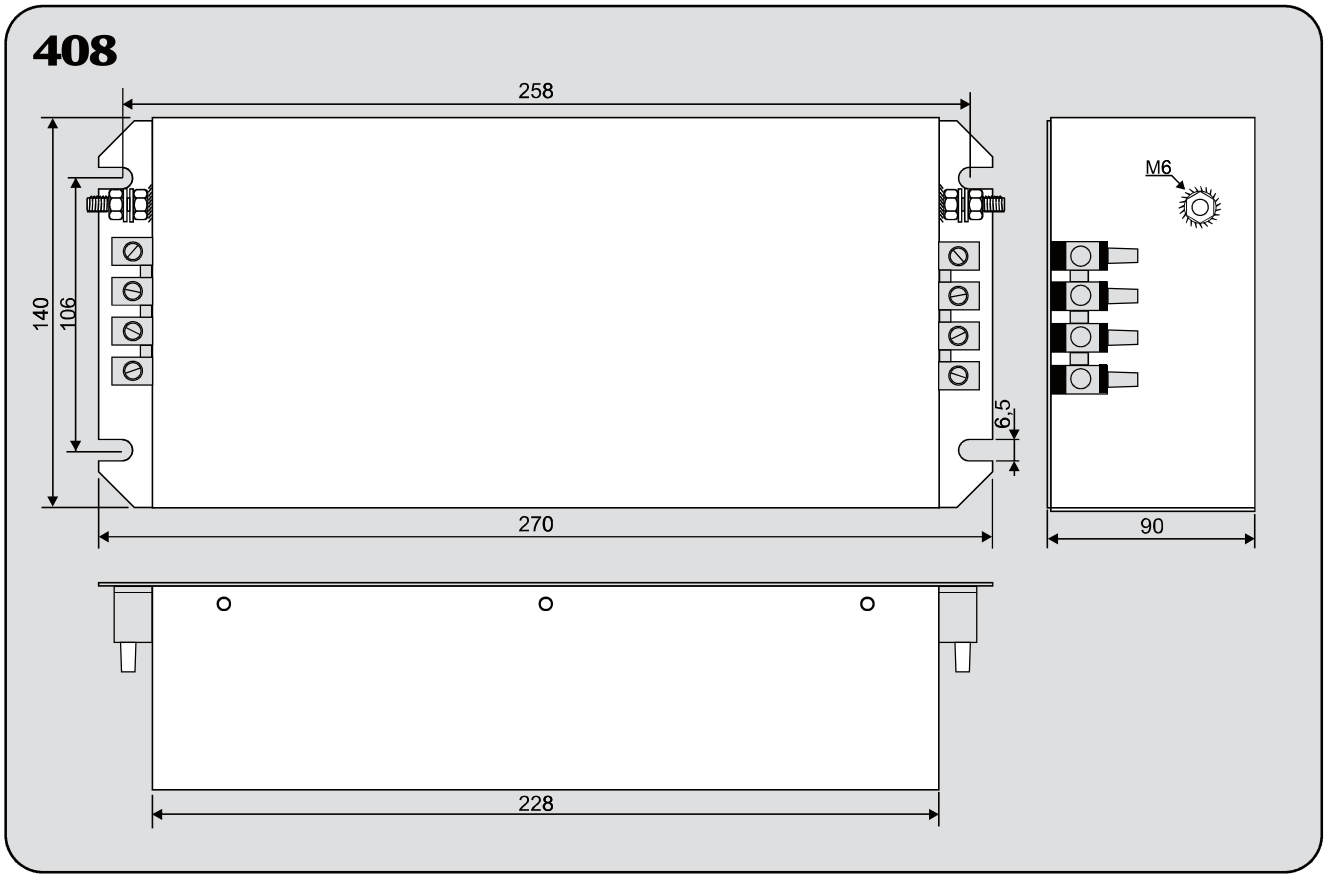

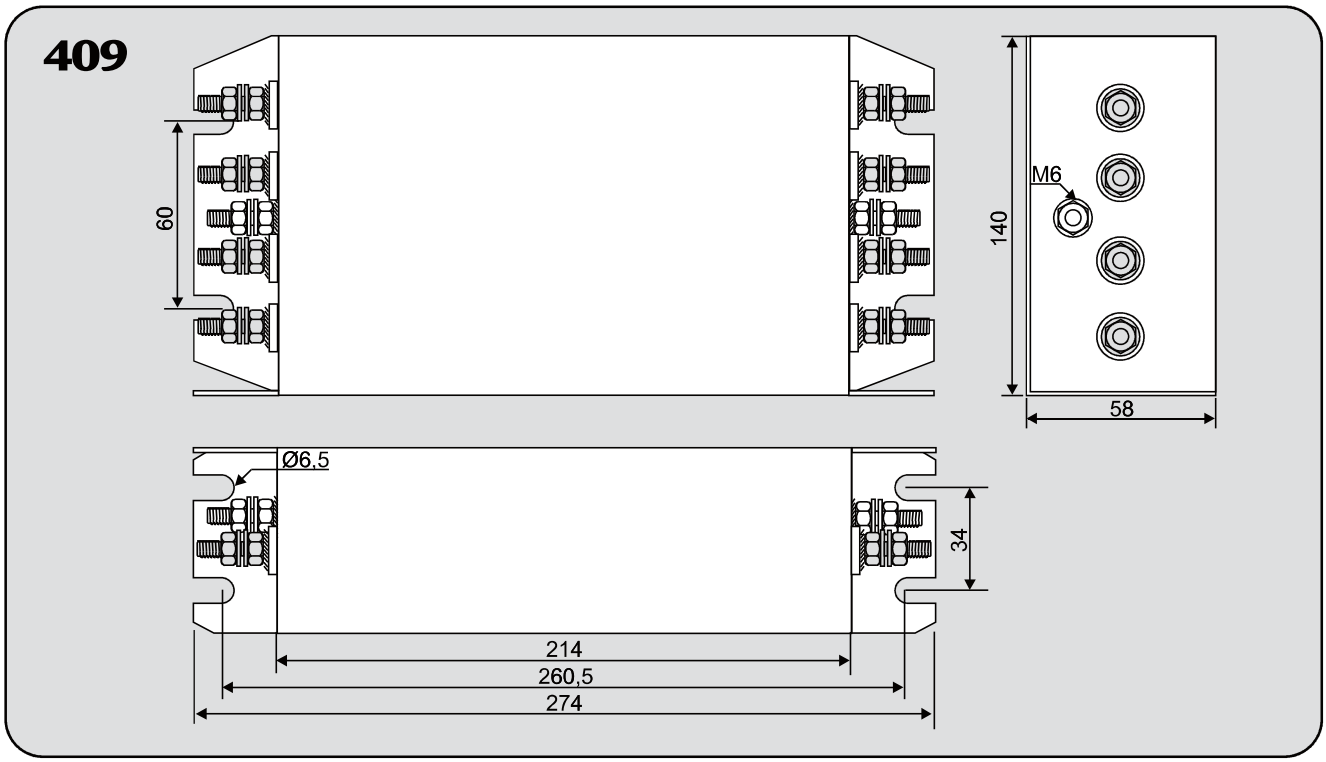

HOUSING

Mechanical dimensions

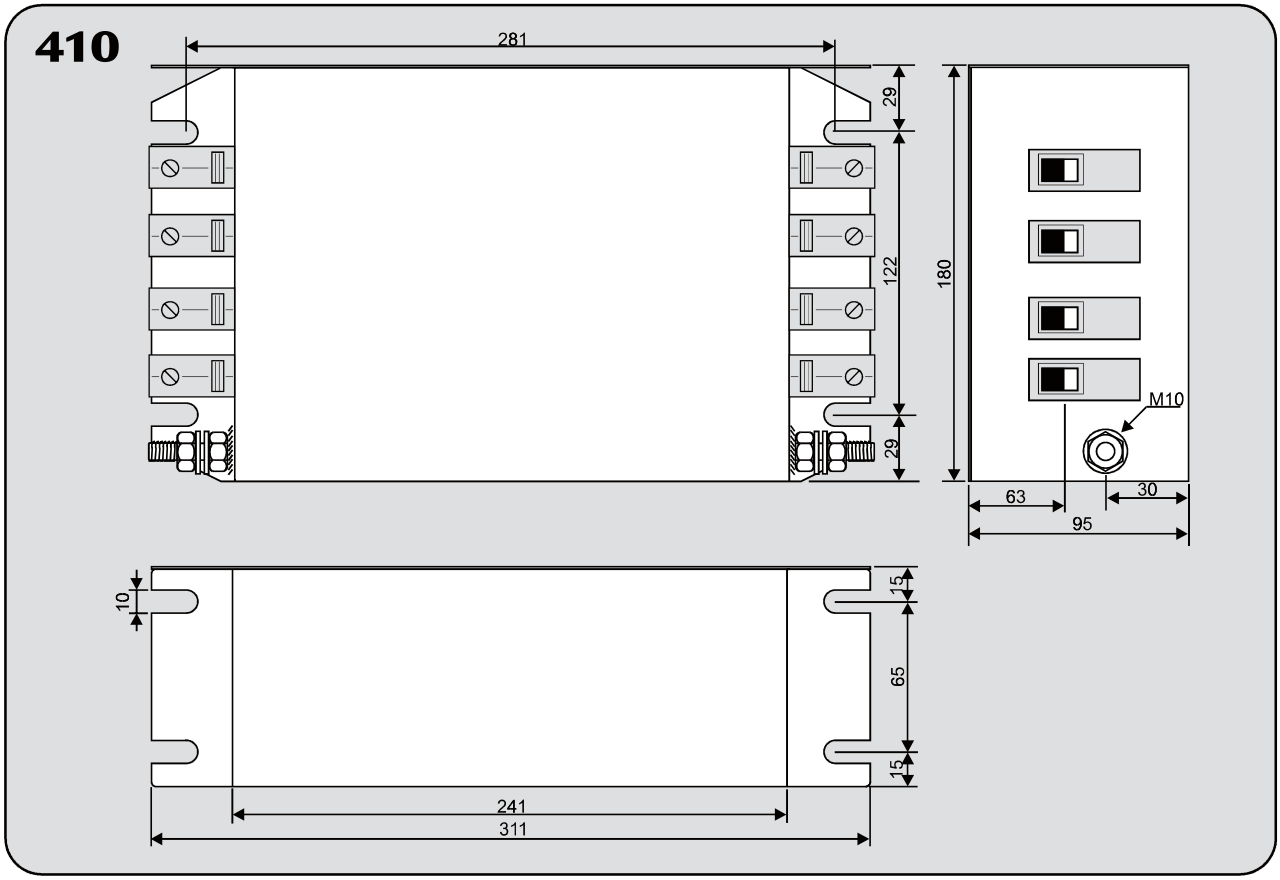

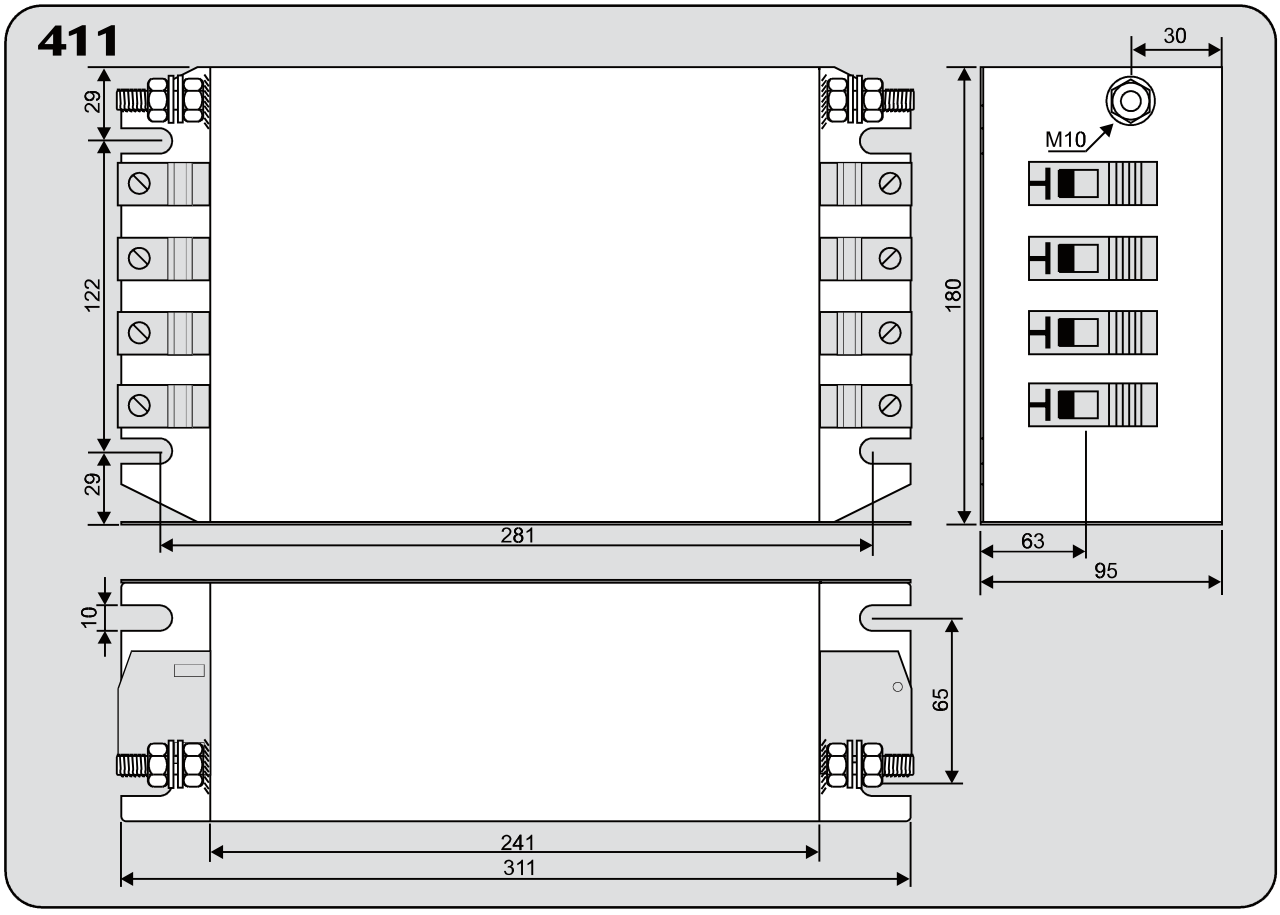

HOUSING

Mechanical dimensions